4-BITS BI-DIRECTIONAL LEVEL TRANSLATOR AUTO DIRECTION 110Mbps PUSH-PULL APPLICATIONS

Description

The LXB0104 is a 4-bits bi-directional level translator for push-pull applications which incorporates a buffered architecture with edge rate accelerators (one shots) to improve the overall data rate up to 110Mbps at 3.3V to 5.0V translation. This device is a universal level translator with A port operating from 1.2V to 3.6V (V_{CCA}) and B port 1.65V to 5.5V (V_{CCB}). This allows for universal low-voltage bi-directional translation between any of the 1.2V, 1.5V, 1.8V, 2.5V, 3.3V, and 5V voltage nodes. For proper operation, please be aware V_{CCA} must not exceed V_{CCB} and the device driving the data I/Os of the LXB0104 must have drive strength of at least ±2mA.

The OE pin is used to activate the device. When OE is HIGH, the translator switch is on. Otherwise, when OE is LOW, the translator switch is off, and a high-impedance OFF-state exists between ports. OE pin is the input for the device and should never be left floating. To ensure the high-impedance OFF-state during power-up or power-down, OE pin should be tied to GND through a pulldown resistor before V_{CCA} becomes stable, the value of the resistor is recommended to be 10kΩ which is determined by the current-sourcing capability of the driver.

This device is fully specified for partial power-down applications using I_{OFF}. The I_{OFF} circuitry disables the output, preventing the damaging backflow current through the device when it is powered down. This inhibits current backflow into the device which prevents damage to the device. If an external pullup or pulldown resistor is used on the device I/O ports, the resistor values must be larger than 50kΩ to avoid affecting V_{OH} or V_{OL}.

Overall, the LXB0104 is designed for easy-to-use with auto direction. So, no need for a direction pin to minimize system effort. This device supports 5V tolerant I/O pins in only translate push-pull CMOS logic output applications.

Pin Assignments

(Top View)

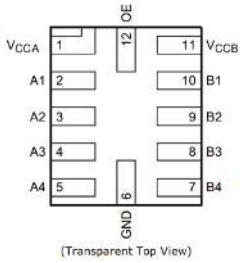

U-QFN1720-12 (Type CJ)

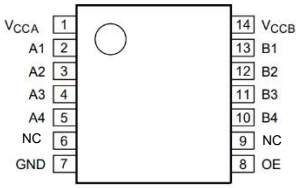

TSSOP-14

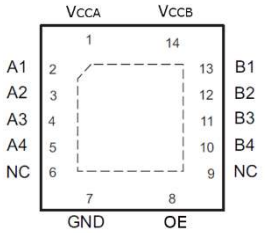

V-QFN3535-14 (Type CJ)

Features

- Bi-Directional Voltage Translation for Push-Pull Applications
- Specified from -40°C to +125°C
- V_{CCA} for A Port: 1.2V to 3.6V
- V_{CCB} for B Port: 1.65V to 5.5V
- Up & Down Translation Data Rate
  - ≤ 110Mbps, C_L = 15pF, 3.3V to 5.0V Translation
  - ≤ 60Mbps, C_L = 15pF, 1.8V to 3.3V Translation
  - ≤ 30Mbps, C_L = 15pF, 1.2V to 1.8V Translation
- I_{OFF} Circuitry Provides Partial-Power-Down Mode Operation
- OE Pin Supports High-Impedance Exists Between Ports
- ESD Protection Exceeds JESD 22
  - 7000V HBM (B1 to B4 Port), 3000V HBM (A Port)
  - 1500V CDM (C101)
- Latchup Exceeds 100mA per JESD 17
- **Totally Lead-Free & Fully RoHS Compliant (Notes 1 & 2)**
- **Halogen and Antimony Free. "Green" Device (Note 3)**
- **An automotive-compliant part is available under a separate datasheet (LXB0104Q)**

Applications

- GPIO, SPI, SDIO, UART
- Telecom infrastructures
- Industrial
- High-performance computing
- Wide array of products such as:
  - PCs, networking, notebooks
  - Smart phones
  - Tablets

Notes:
1. No purposely added lead. Fully EU Directive 2002/95/EC (RoHS), 2011/65/EU (RoHS 2) & 2015/863/EU (RoHS 3) compliant.
2. See https://www.diodes.com/quality/lead-free/ for more information about Diodes Incorporated's definitions of Halogen- and Antimony-free, "Green" and Lead-free.
3. Halogen- and Antimony-free "Green" products are defined as those which contain <900ppm bromine, <900ppm chlorine (<1500ppm total Br + Cl) and <1000ppm antimony compounds.

© 2025 Copyright Diodes Incorporated. All Rights Reserved.

Pin Descriptions

Pin Name	Pin Number			Function
	TSSOP-14	U-QFN1720-12 (Type CJ)	V-QFN3535-14 (Type CJ)	
V_{CCA}	1	1	1	Supply Voltage, A Port
A1	2	2	2	Input/Output 1
A2	3	3	3	Input/Output 2
A3	4	4	4	Input/Output 3
A4	5	5	5	Input/Output 4
NC	6	—	6	No Connection. Not internally connected.
GND	7	6	7	Ground
OE	8	12	8	Output Enable; OE is high-active.
NC	9	—	9	No Connection. Not internally connected.
B4	10	7	10	Input/Output 4
B3	11	8	11	Input/Output 3
B2	12	9	12	Input/Output 2
B1	13	10	13	Input/Output 1
V_{CCB}	14	11	14	Supply Voltage, B Port

Absolute Maximum Ratings (Note 4)

Symbol	Parameter	Rating	Unit
ESD HBM	Human Body Model ESD Protection (B Port)	±7	kV
	Human Body Model ESD Protection (A Port)	±3	kV
ESD CDM	Charged Device Model ESD Protection	±1.5	kV
V_{CCA}, V_{CCB}	Supply Reference Voltage Range	-0.5 to +6.0	V
V_I	Input Voltage Range	-0.5 to +6.0	V
V_O	Voltage Range Applied to Any Output in the High-Z or Power-Off State	-0.5 to +6.0	V
I_{IK}	Input Clamp Current, $V_I < 0$	-50	mA
I_{OK}	Output Clamp Current, $V_O < 0$	-50	mA
I_O	Continuous Output Current	±50	mA
	Continuous Current Through V_{CCA}, V_{CCB}, or GND	±100	mA
T_J	Operating Junction Temperature	-40 to +150	°C
T_{STG}	Storage Temperature	-65 to +150	°C

Note: 4. Stresses greater than those listed under *Absolute Maximum Ratings* can cause permanent damage to the device. These are stress ratings only, and functional operation of the device at these or any other conditions beyond those indicated under *Recommended Operating Conditions* is not implied. Exposure to *Absolute Maximum Ratings* for extended periods can affect device reliability.

© 2025 Copyright Diodes Incorporated. All Rights Reserved.

Functional Diagram

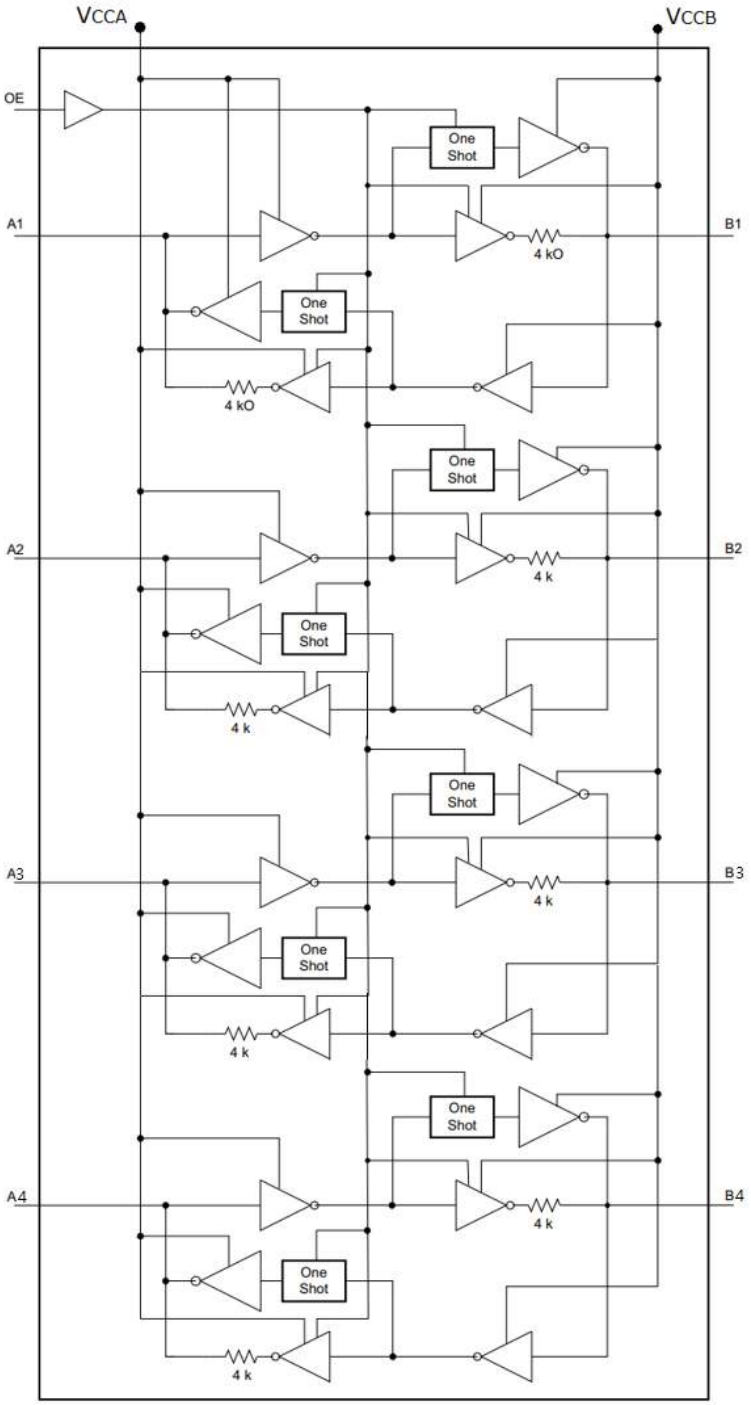

For proper operation, please be aware:

1. V_{CCA} must not exceed V_{CCB} and the device driving the data I/Os of the LXB0104 must have drive strength of at least ±2mA.
2. OE pin is the input for the device and should never be left floating. OE pin should be tied to GND through a pulldown resistor before V_{CCA} becomes stable, the value of the resistor is recommended to be 10kΩ which is determined by the current-sourcing capability of the driver.
3. If an external pullup or pulldown resistor is used on the device I/O ports, the resistor values must be larger than 50kΩ to avoid affecting V_{OH} or V_{OL}.

© 2025 Copyright Diodes Incorporated. All Rights Reserved.

Recommended Operating Conditions

Symbol	Parameter	Min	Max	Unit
V_{CCA}	Reference Voltage, A Port	1.2	3.6	V
V_{CCB}	Reference Voltage, B Port	1.65	5.5	V
V_I	Input Voltage, OE = Low (OFF), A1, A2	0	4.5	V
	Input Voltage, OE = Low (OFF), B1, B2	0	5.5	V
	OE = High (ON)	0	V_{CCI} (Note 5)	V
V_O	Output Voltage, OE = Low (OFF), A1, A2	0	4.5	V
	Output Voltage, OE = Low (OFF), B1, B2	0	5.5	V
	OE = High (ON)	0	V_{CCO} (Note 5)	V
Δt/ΔV	Input Transition Rise or Fall Rate	0	40	ns/V
I_{PASS}	Pass Transistor Current	—	64	mA
T_A	Operating Free-Air Temperature	-40	+125	°C

Note: 5. V_{CCI} is the supply voltage associated with the input port; V_{CCO} is the supply voltage associated with the output port.

Electrical Characteristics (All typical values are measured at T_A = +25°C, unless otherwise specified, Notes 6 & 7.)

Symbol	Parameter	Test Conditions	Min	Typ	Max	Unit
V_{CCA}	A Port Supply Voltage	—	1.2	—	3.6	V
V_{CCB}	B Port Supply Voltage	—	1.65	—	5.5	V
V_{IH}	Input High-Level Voltage	A port & B port, data input	V_{CCI} × 0.65	—	V_{CCI}	V
V_{IL}	Input Low-Level Voltage	A port & B port, data input	0	—	V_{CCI} × 0.35	V
V_{OHA}	Output High-Level Voltage	A port, V_{CCA} = 1.2V, I_{OH} = -20μA	V_{CCA} × 0.8	—	—	V
		A port, V_{CCA} = 1.4V to 3.6V, I_{OH} = -20μA	V_{CCA} - 0.4	—	—	V
V_{OLA}	Output Low-Level Voltage	A port, V_{CCA} = 1.2V, I_{OL} = +20μA	—	—	V_{CCA} × 0.2	V
		A port, V_{CCA} = 1.4V to 3.6V, I_{OL} = +20μA	—	—	0.4	V
V_{OHB}	Output High-Level Voltage	B port, I_{OH} = -20μA, V_{CCB} = 1.65V to 5.5V	V_{CCB} - 0.4	—	—	V
V_{OLB}	Output Low-Level Voltage	B port, I_{OL} = +20μA, V_{CCB} = 1.65V to 5.5V	—	—	0.4	V
C_{IOE}	OE Pin Capacitance	V_{CCA} = 1.2V to 3.6V	—	3	—	pF
C_{IOA}	A Port I/O Capacitance	V_{CCA} = 1.2V to 3.6V	—	5	—	pF
C_{IOB}	B Port I/O Capacitance	V_{CCB} = 1.65V to 5.5V	—	11	—	pF
I_{CCA} + I_{CCB}	Total Supply Current	V_{IN} = GND, I_O = 0, V_{CCA} = 1.2V to 3.6V V_{CCB} = 1.65V to 5.5V	—	1	20	μA
I_{CCA}	A Port Supply Current	V_{IN} = GND, I_O = 0, V_{CCA} = 1.2V to 3.6V V_{CCB} = 1.65V to 5.5V	—	0.5	10	μA
		V_{IN} = GND, I_O = 0, V_{CCA} = 3.6V, V_{CCB} = 0	—	0.5	8	μA
		V_{IN} = GND, I_O = 0, V_{CCA} = 0, V_{CCB} = 5.5V	—	0.5	-8	μA
I_{CCB}	B Port Supply Current	V_{IN} = GND, I_O = 0, V_{CCA} = 1.2V to 3.6V V_{CCB} = 1.65V to 5.5V	—	0.5	10	μA
		V_{IN} = GND, I_O = 0, V_{CCA} = 3.6V, V_{CCB} = 0	—	0.5	-8	μA
		V_{IN} = GND, I_O = 0, V_{CCA} = 0, V_{CCB} = 5.5V	—	0.5	8	μA
I_{CCZA}	High Impedance State V_{CCA} Current	OE = V_{IN} = GND, I_O = 0, V_{CCA} = 1.2V to 3.6V V_{CCB} = 1.65V to 5.5V	—	0.5	5	μA
I_{CCZB}	High Impedance State V_{CCB} Current	OE = V_{IN} = GND, I_O = 0, V_{CCA} = 1.2V to 3.6V V_{CCB} = 1.65V to 5.5V	—	0.5	5	μA
I_{OZ}	Off-State Output Current	OE = GND, A port: 1.2V to 3.6V B port: 1.65V to 5.5V	—	±0.5	±5	μA
I_{OFF}	Off-State Leakage Current	A port, V_I or V_O = 0 to 3.6V, V_{CCA} = 0 V_{CCB} = 0 to 5.5V	—	±0.5	±10	μA
		B port, V_I or V_O = 0 to 5.5V, V_{CCB} = 0 V_{CCA} = 0 to 3.6V	—	±0.5	±10	μA

Notes: 6. V_{CCA} must be less than or equal to V_{CCB}. V_{CCI} is the supply voltage associated with the input port.
7. All DC current are measured at T_A = +25°C as typical values and maximum values are measured among T_A = -40°C to +125°C.

© 2025 Copyright Diodes Incorporated. All Rights Reserved.

Dynamic Switching Characteristics (Notes 8 & 9, unless otherwise specified.)

V_{CCA} = 1.2V, T_A = +25°C & +125°C

Parameter	From (Input)	To (Output)	V_{CCB} = 1.8V	V_{CCB} = 2.5V	V_{CCB} = 3.3V	V_{CCB} = 5.0V	Unit
			Max	Max	Max	Max	
t_{PD}	A	B	12.5	10.5	11.0	11.0	ns
	B	A	17.5	16.5	17.0	17.0	ns
t_{EN}	OE	A	1.0	1.0	1.0	1.0	µs
	OE	B	1.0	1.0	1.0	1.0	µs
t_{DIS}	OE	A	380	360	330	330	ns
	OE	B	350	330	320	320	ns
t_{RA}, t_{FA}	A port rise time and fall time		9.5	9.3	9.2	9.2	ns
t_{RB}, t_{FB}	B port rise time and fall time		5.5	5.3	5.2	5.2	ns
t_{SKO}	Skew time, between channels		0.5	0.5	0.5	0.5	ns
Data rate	—		30	30	30	30	Mbps
Test conditions: C_L = 15pF includes probe and jig capacitance. R_L = Load resistance. For measuring data rate, pulse width, propagation delay, output rise and fall time and enable time, R_L = 1MΩ. For measuring disable time, R_L = 50kΩ. All input pulses are supplied by generators having the following characteristics: PRR = 10MHz, ZO = 50Ω, dv / dt ≥ 1V/ns. See load circuit for details.							

V_{CCA} = 1.8V, T_A = +125°C

Parameter	From (Input)	To (Output)	V_{CCB} = 1.8V	V_{CCB} = 2.5V	V_{CCB} = 3.3V	V_{CCB} = 5.0V	Unit
			Max	Max	Max	Max	
t_{PD}	A	B	—	7.4	7.1	7.0	ns
	B	A	—	8.5	7.9	7.6	ns
t_{EN}	OE	A	—	0.8	0.8	0.8	µs
	OE	B	—	0.8	0.8	0.8	µs
t_{DIS}	OE	A	—	240	240	240	ns
	OE	B	—	210	210	210	ns
t_{RA}, t_{FA}	A port rise time and fall time		—	6.2	6.1	6.0	ns
t_{RB}, t_{FB}	B port rise time and fall time		—	5.3	4.9	4.8	ns
t_{SKO}	Skew time, between channels		—	0.5	0.5	0.5	ns
Data rate	—		—	55	65	65	Mbps
Test conditions: C_L = 15pF includes probe and jig capacitance. R_L = Load resistance. For measuring data rate, pulse width, propagation delay, output rise and fall time and enable time, R_L = 1MΩ. For measuring disable time, R_L = 50kΩ. All input pulses are supplied by generators having the following characteristics: PRR = 10MHz, ZO = 50Ω, dv / dt ≥ 1V/ns. See load circuit for details.							

V_{CCA} = 2.5V, T_A = +125°C

Parameter	From (Input)	To (Output)	V_{CCB} = 1.8V	V_{CCB} = 2.5V	V_{CCB} = 3.3V	V_{CCB} = 5.0V	Unit
			Max	Max	Max	Max	
t_{PD}	A	B	—	—	6.2	5.9	ns
	B	A	—	—	6.5	6.2	ns
t_{EN}	OE	A	—	—	0.7	0.7	µs
	OE	B	—	—	0.7	0.7	µs
t_{DIS}	OE	A	—	—	220	220	ns
	OE	B	—	—	210	210	ns
t_{RA}, t_{FA}	A port rise time and fall time		—	—	5.5	5.5	ns
t_{RB}, t_{FB}	A port rise time and fall time		—	—	4.8	4.7	ns
t_{SKO}	Skew time, between channels		—	—	0.5	0.5	ns
Data rate	—		—	—	75	80	Mbps
Test conditions: C_L = 15pF includes probe and jig capacitance. R_L = Load resistance. For measuring data rate, pulse width, propagation delay, output rise and fall time and enable time, R_L = 1MΩ. For measuring disable time, R_L = 50kΩ. All input pulses are supplied by generators having the following characteristics: PRR = 10MHz, ZO = 50Ω, dv / dt ≥ 1V/ns. See load circuit for details.							

Notes: 8. For correct operation, the device driving the data I/Os of the LXB0104 must have a minimum drive capability of ±2mA.
9. See Figure 1, t_{PD} is the same as t_{PLH} and t_{PHL}; t_{EN} is the same as t_{PZL} and t_{PZH}; t_{DIS} is the same as t_{PLZ} and t_{PHZ}.

© 2025 Copyright Diodes Incorporated. All Rights Reserved.

Dynamic Switching Characteristics (Notes 8 & 9, unless otherwise specified.) (continued)

V_{CCA} = 3.3V, T_A = +125°C

Parameter	From (Input)	To (Output)	V_{CCB} = 1.8V	V_{CCB} = 2.5V	V_{CCB} = 3.3V	V_{CCB} = 5.0V	Unit
			Max	Max	Max	Max	
t_{PD}	A	B	—	—	—	3.9	ns
	B	A	—	—	—	4.8	ns
t_{EN}	OE	A	—	—	—	0.7	µs
	OE	B	—	—	—	0.7	µs
t_{DIS}	OE	A	—	—	—	210	ns
	OE	B	—	—	—	210	ns
t_{RA}, t_{FA}	A port rise time and fall time		—	—	—	4.8	ns
t_{RB}, t_{FB}	A port rise time and fall time		—	—	—	4.6	ns
t_{SKO}	Skew time, between channels		—	—	—	0.5	ns
Data rate	—		—	—	—	110	Mbps
Test conditions: C_L = 15pF includes probe and jig capacitance. R_L = Load resistance. For measuring data rate, pulse width, propagation delay, output rise and fall time and enable time, R_L = 1MΩ. For measuring disable time, R_L = 50kΩ. All input pulses are supplied by generators having the following characteristics: PRR = 10MHz, ZO = 50Ω, dv / dt ≥ 1V/ns. See load circuit for details.							

Notes: 8. For correct operation, the device driving the data I/Os of the LXB0104 must have a minimum drive capability of ±2mA.
9. See Figure 1, t_{PD} is the same as t_{PLH} and t_{PHL}; t_{EN} is the same as t_{PZL} and t_{PZH}; t_{DIS} is the same as t_{PLZ} and t_{PHZ}.

© 2025 Copyright Diodes Incorporated. All Rights Reserved.

Parameter Measurement Information

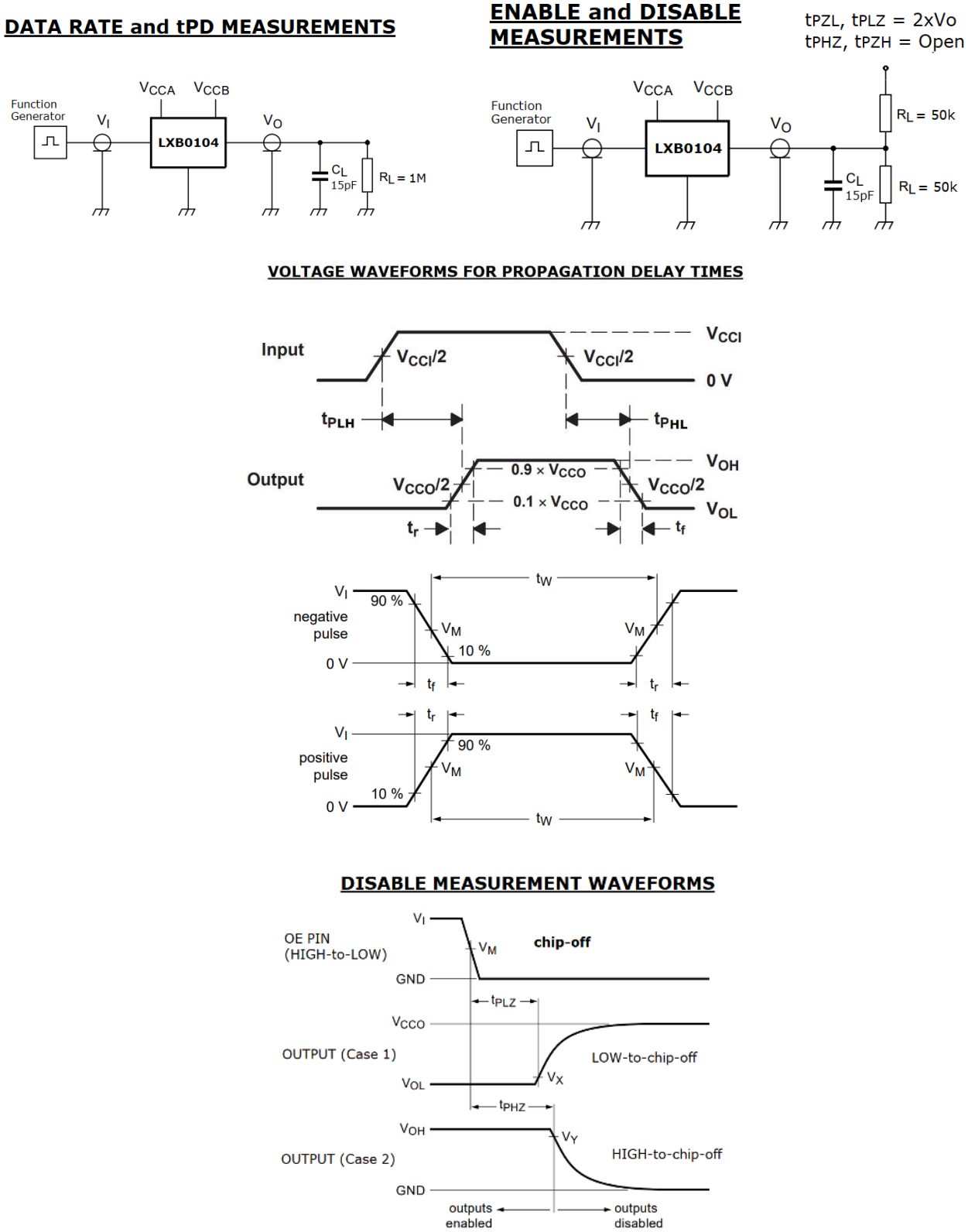

Figure 1. The LXB0104 must be driven at least ±2mA for proper operation.
Load circuit and function generators having the following characteristics: PRR ≤ 10MHz, ZO = 50Ω, dv / dt ≥ 1.0V/ns

© 2025 Copyright Diodes Incorporated. All Rights Reserved.

Package Characteristics

Symbol	Parameter	Package	Test Conditions	Min	Typ	Max	Unit
θ_{JA}	Thermal Resistance Junction-to-Ambient	U-QFN1720-12 (Type CJ)	Note 10	—	102	—	°C/W
		TSSOP-14		—	110	—	
		V-QFN3535-14 (Type CJ)		—	62	—	
θ_{JC}	Thermal Resistance Junction-to-Case	U-QFN1720-12 (Type CJ)	Note 10	—	32	—	
		TSSOP-14		—	54	—	
		V-QFN3535-14 (Type CJ)		—	25	—	

Note: 10. Test condition for each of the package type(s): device mounted on JEDEC standard PCB per JESD51, with minimum recommended pad layout.

Ordering Information

LXB 0 1 0 4 x - x

Family	Numbers	Package	Packing
LXB	4 : 4-bits	ZMJ12 : U-QFN1720-12 (Type CJ) T14 : TSSOP-14 ZB14 : V-QFN3535-14 (Type CJ)	7 : 7” Tape & Reel 13 : 13” Tape & Reel

Orderable Part Number	Part Number Suffix	Package Code	Package	Packing (Note 11)	
				Qty.	Carrier
LXB0104ZMJ12-7	-7	ZMJ12	U-QFN1720-12 (Type CJ)	3,000	7” Tape and Reel
LXB0104T14-13	-13	T14	TSSOP-14	2,500	13” Tape and Reel
LXB0104ZB14-13	-13	ZB14	V-QFN3535-14 (Type CJ)	5,000	13” Tape and Reel

Notes: 11. The taping orientation is located on our website at https://www.diodes.com/assets/Packaging-Support-Docs/AP02007.pdf.
12. For packaging details, go to our website at https://www.diodes.com/design/support/packaging/diodes-packaging/.
13. Pad layout as shown in Diodes Incorporated’s package outline PDFs, which can be found on our website at http://www.diodes.com/package-outlines.html.

Marking Information

(1) U-QFN1720-12 (Type CJ)

(Top View)

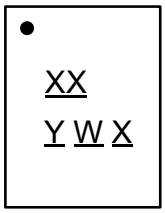

XX : Identification Code
Y : Year : 0 to 9 (ex: 5 = 2025)
W : Week : A to Z : week 1 to 26;
a to z : week 27 to 52; z represents week 52 and 53
X : Internal Code

Orderable Part Number	Package	Identification Code
LXB0104ZMJ12-7	U-QFN1720-12 (Type CJ)	BU

© 2025 Copyright Diodes Incorporated. All Rights Reserved.

Marking Information (continued)

(2) TSSOP-14

(Top View)

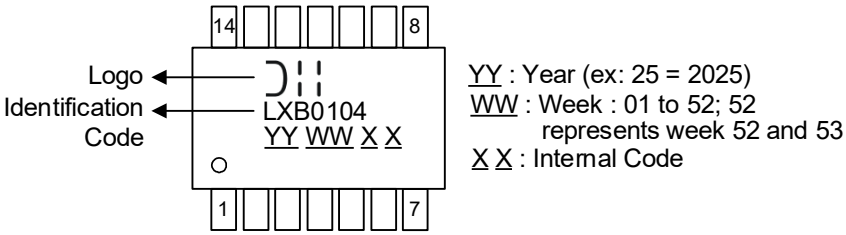

Orderable Part Number	Package	Identification Code
LXB0104T14-13	TSSOP-14	LXB0104

(3) V-QFN3535-14 (Type CJ)

(Top View)

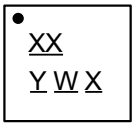

XX : Identification Code
Y : Year : 0 to 9 (ex: 5 = 2025)
W : Week : A to Z : week 1 to 26; a to z : week 27 to 52; z represents week 52 and 53
X : Internal Code

Orderable Part Number	Package	Identification Code
LXB0104ZB14-13	V-QFN3535-14 (Type CJ)	BV

© 2025 Copyright Diodes Incorporated. All Rights Reserved.

Package Outline Dimensions

Please see http://www.diodes.com/package-outlines.html for the latest version.

U-QFN1720-12 (Type CJ)

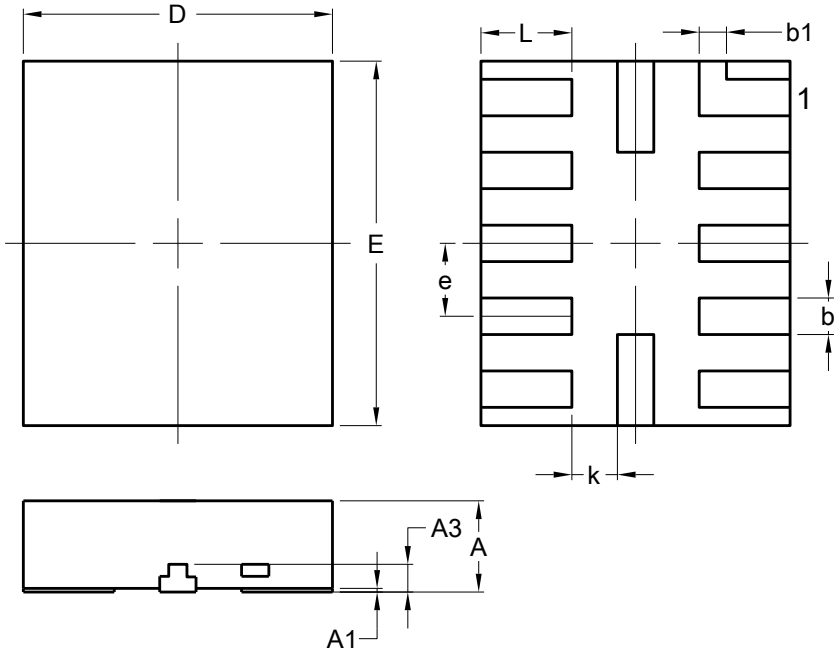

U-QFN1720-12 (Type CJ)			
Dim	**Min**	**Max**	**Typ**
A	0.450	0.550	--
A1	0.00	0.050	--
A3	0.152 REF		
b	0.150	0.250	--
b1	0.150 REF		
D	1.600	1.800	--
E	1.900	2.100	--
e	0.400 BSC		
k	0.250 REF		
L	0.400	0.600	--
All Dimensions in mm			

TSSOP-14

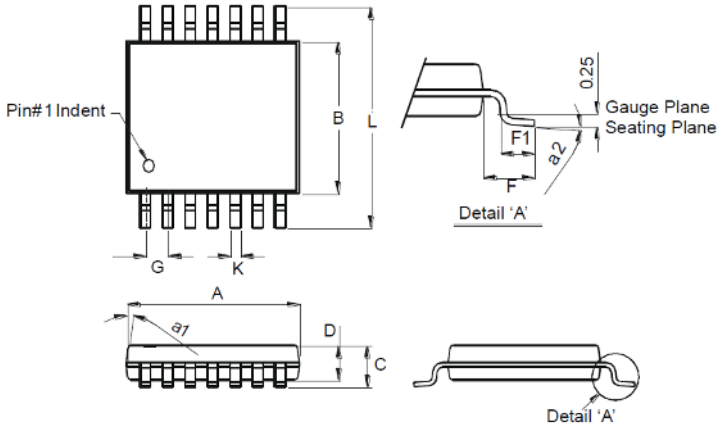

TSSOP-14		
Dim	**Min**	**Max**
a1	7° (4X)	
a2	0°	8°
A	4.9	5.10
B	4.30	4.50
C	-	1.2
D	0.8	1.05
F	1.00 Typ	
F1	0.45	0.75
G	0.65 Typ	
K	0.19	0.30
L	6.40 Typ	
All Dimensions in mm		

© 2025 Copyright Diodes Incorporated. All Rights Reserved.

Package Outline Dimensions (continued)

Please see http://www.diodes.com/package-outlines.html for the latest version.

V-QFN3535-14 (Type CJ)

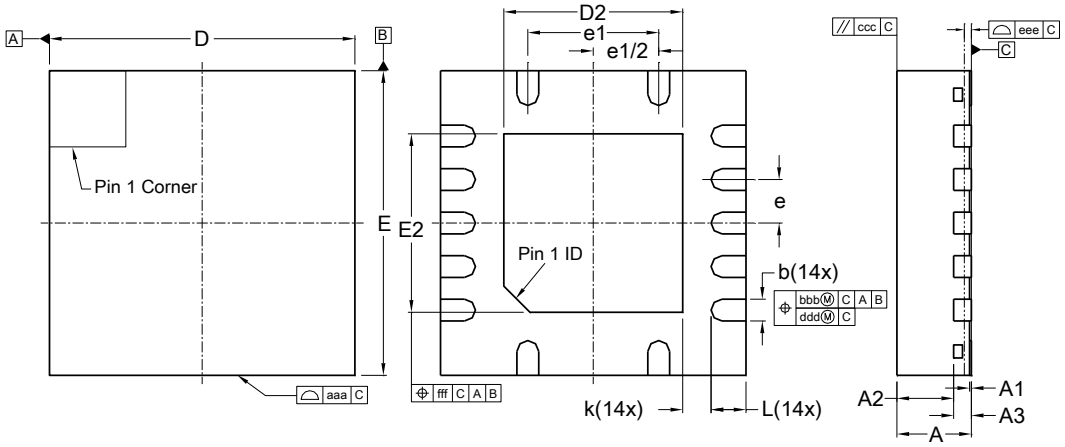

V-QFN3535-14 (Type CJ)			
Dim	**Min**	**Max**	**Typ**
A	0.80	0.90	0.85
A1	0.00	0.05	0.02
A2	--	--	0.65
A3	0.203 REF		
b	0.20	0.30	0.25
D	3.50 BSC		
D2	1.95	2.15	2.05
E	3.50 BSC		
E2	1.95	2.15	2.05
e	0.50 BSC		
e1	1.50 BSC		
L	0.30	0.50	0.40
k	0.325 REF		
aaa	0.1		
bbb	0.1		
ccc	0.1		
ddd	0.05		
eee	0.08		
fff	0.1		
All Dimensions in mm			

Suggested Pad Layout

Please see http://www.diodes.com/package-outlines.html for the latest version.

U-QFN1720-12 (Type CJ)

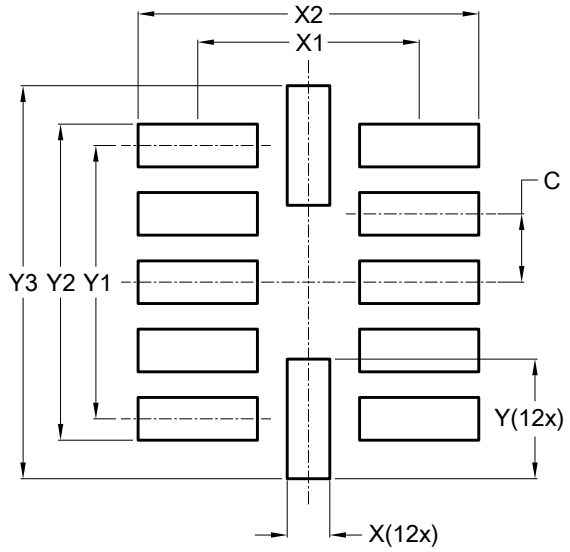

Dimensions	Value (in mm)
C	0.400
X	0.250
X1	1.300
X2	2.000
Y	0.700
Y1	1.600
Y2	1.850
Y3	2.300

© 2025 Copyright Diodes Incorporated. All Rights Reserved.

Suggested Pad Layout (continued)

Please see http://www.diodes.com/package-outlines.html for the latest version.

TSSOP-14

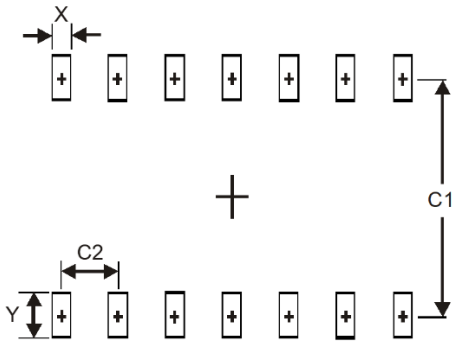

Dimensions	Value (in mm)
X	0.45
Y	1.45
C1	5.9
C2	0.65

V-QFN3535-14 (Type CJ)

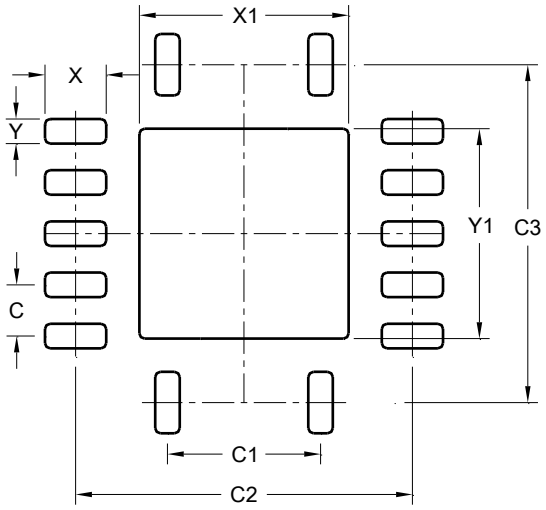

Dimensions	Value (in mm)
C	0.500
C1	1.500
C2	3.300
C3	3.300
X	0.600
X1	2.050
Y	0.240
Y1	2.050

Mechanical Data

- Moisture Sensitivity: Level 1 per J-STD-020
- Terminals: Finish – Matte Tin Plated Leads, Solderable per MIL-STD-202, Method 208 e3
- Max Soldering Temperature +260°C for 30 secs as per JEDEC J-STD-020
- Weight:
  - U-QFN1720-12 (Type CJ): 21.5mg (Approximate)
  - TSSOP-14: 82.5mg (Approximate)
  - V-QFN3535-14 (Type CJ): 32.5mg (Approximate)

© 2025 Copyright Diodes Incorporated. All Rights Reserved.

IMPORTANT NOTICE

1. DIODES INCORPORATED (Diodes) AND ITS SUBSIDIARIES MAKE NO WARRANTY OF ANY KIND, EXPRESS OR IMPLIED, WITH REGARDS TO ANY INFORMATION CONTAINED IN THIS DOCUMENT, INCLUDING, BUT NOT LIMITED TO, THE IMPLIED WARRANTIES OF MERCHANTABILITY, FITNESS FOR A PARTICULAR PURPOSE OR NON-INFRINGEMENT OF THIRD PARTY INTELLECTUAL PROPERTY RIGHTS (AND THEIR EQUIVALENTS UNDER THE LAWS OF ANY JURISDICTION).

2. The Information contained herein is for informational purpose only and is provided only to illustrate the operation of Diodes' products described herein and application examples. Diodes does not assume any liability arising out of the application or use of this document or any product described herein. This document is intended for skilled and technically trained engineering customers and users who design with Diodes' products. Diodes' products may be used to facilitate safety-related applications; however, in all instances customers and users are responsible for (a) selecting the appropriate Diodes products for their applications, (b) evaluating the suitability of Diodes' products for their intended applications, (c) ensuring their applications, which incorporate Diodes' products, comply the applicable legal and regulatory requirements as well as safety and functional-safety related standards, and (d) ensuring they design with appropriate safeguards (including testing, validation, quality control techniques, redundancy, malfunction prevention, and appropriate treatment for aging degradation) to minimize the risks associated with their applications.

3. Diodes assumes no liability for any application-related information, support, assistance or feedback that may be provided by Diodes from time to time. Any customer or user of this document or products described herein will assume all risks and liabilities associated with such use, and will hold Diodes and all companies whose products are represented herein or on Diodes' websites, harmless against all damages and liabilities.

4. Products described herein may be covered by one or more United States, international or foreign patents and pending patent applications. Product names and markings noted herein may also be covered by one or more United States, international or foreign trademarks and trademark applications. Diodes does not convey any license under any of its intellectual property rights or the rights of any third parties (including third parties whose products and services may be described in this document or on Diodes' website) under this document.

5. Diodes' products are provided subject to Diodes' Standard Terms and Conditions of Sale (https://www.diodes.com/about/company/terms-and-conditions/terms-and-conditions-of-sales/) or other applicable terms. This document does not alter or expand the applicable warranties provided by Diodes. Diodes does not warrant or accept any liability whatsoever in respect of any products purchased through unauthorized sales channel.

6. Diodes' products and technology may not be used for or incorporated into any products or systems whose manufacture, use or sale is prohibited under any applicable laws and regulations. Should customers or users use Diodes' products in contravention of any applicable laws or regulations, or for any unintended or unauthorized application, customers and users will (a) be solely responsible for any damages, losses or penalties arising in connection therewith or as a result thereof, and (b) indemnify and hold Diodes and its representatives and agents harmless against any and all claims, damages, expenses, and attorney fees arising out of, directly or indirectly, any claim relating to any noncompliance with the applicable laws and regulations, as well as any unintended or unauthorized application.

7. While efforts have been made to ensure the information contained in this document is accurate, complete and current, it may contain technical inaccuracies, omissions and typographical errors. Diodes does not warrant that information contained in this document is error-free and Diodes is under no obligation to update or otherwise correct this information. Notwithstanding the foregoing, Diodes reserves the right to make modifications, enhancements, improvements, corrections or other changes without further notice to this document and any product described herein. This document is written in English but may be translated into multiple languages for reference. Only the English version of this document is the final and determinative format released by Diodes.

8. Any unauthorized copying, modification, distribution, transmission, display or other use of this document (or any portion hereof) is prohibited. Diodes assumes no responsibility for any losses incurred by the customers or users or any third parties arising from any such unauthorized use.

9. This Notice may be periodically updated with the most recent version available at https://www.diodes.com/about/company/terms-and-conditions/important-notice

The Diodes logo is a registered trademark of Diodes Incorporated in the United States and other countries.
All other trademarks are the property of their respective owners.
© 2025 Diodes Incorporated. All Rights Reserved.

www.diodes.com

© 2025 Copyright Diodes Incorporated. All Rights Reserved.