Si86xx 1 Mbps Data Sheet

1 Mbps, 2.5 kV_{RMS} Digital Isolators

Skyworks' family of ultra-low-power digital isolators are CMOS devices offering substantial data rate, propagation delay, power, size, reliability, and external BOM advantages over legacy isolation technologies. The operating parameters of these products remain stable across wide temperature ranges and throughout device service life for ease of design and highly uniform performance. All device versions have Schmitt trigger inputs for high noise immunity and only require VDD bypass capacitors.

All products support Data rates up to 1 Mbps and Enable inputs which provide a single point control for enabling and disabling output drive. All products are safety certified by UL, CSA, VDE, and CQC and support withstand ratings up to 2.5 kV_{RMS}.

Automotive Grade is available for certain part numbers. These products are built using automotive-specific flows at all steps in the manufacturing process to ensure the robustness and low defectivity required for automotive applications.

Industrial Applications

- Industrial automation systems
- Medical electronics
- Isolated switch mode supplies
- Isolated ADC, DAC
- Motor control
- Power inverters
- Communication systems

Safety Regulatory Approvals

- UL 1577 recognized
  - Up to 5000 V_{RMS} for 1 minute
- CSA component notice 5A approval
  - IEC 60950-1, 61010-1
- VDE certification conformity
  - IEC 60747-5-2 (VDE0884 Part 2)
- CQC certification approval
  - GB4943.1

Automotive Applications

- On-board chargers
- Battery management systems
- Charging stations
- Traction inverters
- Hybrid Electric Vehicles
- Battery Electric Vehicles

KEY FEATURES

- High-speed operation
  - DC to 1 Mbps
- No start-up initialization required
- Wide Operating Supply Voltage
  - 2.5 to 5.5 V
- Up to 2500 V_{RMS} isolation
- 60-year life at rated working voltage
- High electromagnetic immunity
- Ultra low power (typical)
  - 5 V Operation: 1.6 mA per channel at 1 Mbps
  - 2.5 V Operation: 1.5 mA per channel at 1 Mbps
- Tri-state outputs with ENABLE
- Schmitt trigger inputs
- Transient Immunity 50 kV/µs
- AEC-Q100 qualification
- Wide temperature range
  - –40 to 125 °C
- RoHS-compliant packages
  - SOIC-16 wide body
  - SOIC-16 narrow body
  - SOIC-8 narrow body
- Automotive-grade OPNs available
  - AIAG compliant PPAP documentation support
  - IMDS and CAMDS listing support

1. Ordering Guide

Industrial and Automotive Grade OPNs

Industrial-grade devices (part numbers having an “-I” in their suffix) are built using well-controlled, high-quality manufacturing flows to ensure robustness and reliability. Qualifications are compliant with JEDEC, and defect reduction methodologies are used throughout definition, design, evaluation, qualification, and mass production steps.

Automotive-grade devices (part numbers having an “-A” in their suffix) are built using automotive-specific flows at all steps in the manufacturing process to ensure robustness and low defectivity. These devices are supported with AIAG-compliant Production Part Approval Process (PPAP) documentation, and feature International Material Data System (IMDS) and China Automotive Material Data System (CAMDS) listing. Qualifications are compliant with AEC-Q100, and a zero-defect methodology is maintained throughout definition, design, evaluation, qualification, and mass production steps.

Table 1.1. Ordering Guide for Valid OPNs[1, 2, 4]

Ordering Part Number (OPN)	Automotive OPNs[5, 6]	Number of Inputs VDD1 Side	Number of Inputs VDD2 Side	Max Data Rate (Mbps)	Default Output State	Isolation Rating (kV)	Package
Si8610AB-B-IS	Si8610AB-AS	1	0	1	Low	2.5	SOIC-8
Si8620AB-B-IS	Si8620AB-AS	2	0	1	Low	2.5	SOIC-8
Si8621AB-B-IS	Si8621AB-AS	1	1	1	Low	2.5	SOIC-8
Si8630AB-B-IS	Si8630AB-AS	3	0	1	Low	2.5	WB SOIC-16
Si8630AB-B-IS1	Si8630AB-AS1	3	0	1	Low	2.5	NB SOIC-16
Si8631AB-B-IS	Si8631AB-AS	2	1	1	Low	2.5	WB SOIC-16
Si8631AB-B-IS1	Si8631AB-AS1	2	1	1	Low	2.5	NB SOIC-16
Si8640AB-B-IS1	Si8640AB-AS1	4	0	1	Low	2.5	NB SOIC-16
Si8640AB-B-IS	Si8640AB-AS	4	0	1	Low	2.5	WB SOIC-16
Si8641AB-B-IS1	Si8641AB-AS1	3	1	1	Low	2.5	NB SOIC-16
Si8641AB-B-IS	Si8641AB-AS	3	1	1	Low	2.5	WB SOIC-16
Si8642AB-B-IS1	Si8642AB-AS1	2	2	1	Low	2.5	NB SOIC-16
Si8642AB-B-IS	Si8642AB-AS	2	2	1	Low	2.5	WB SOIC-16
Si8650AB-B-IS1	Si8650AB-AS1	5	0	1	Low	2.5	NB SOIC-16
Si8651AB-B-IS1	Si8651AB-AS1	4	1	1	Low	2.5	NB SOIC-16
Si8652AB-B-IS1	Si8652AB-AS1	3	2	1	Low	2.5	NB SOIC-16
Si8660AB-B-IS1	Si8660AB-AS1	6	0	1	Low	2.5	NB SOIC-16
Si8661AB-B-IS1	Si8661AB-AS1	5	1	1	Low	2.5	NB SOIC-16
Si8662AB-B-IS1	Si8662AB-AS1	4	2	1	Low	2.5	NB SOIC-16
Si8663AB-B-IS1	Si8663AB-AS1	3	3	1	Low	2.5	NB SOIC-16

Ordering Part Number (OPN)	Automotive OPNs[5, 6]	Number of Inputs VDD1 Side	Number of Inputs VDD2 Side	Max Data Rate (Mbps)	Default Output State	Isolation Rating (kV)	Package

Notes:

1. All packages are RoHS-compliant with peak reflow temperatures of 260 °C according to the JEDEC industry standard classifications and peak solder temperatures.
2. “Si” and “SI” are used interchangeably.
3. An "R" at the end of the part number denotes tape and reel packaging option.
4. Temperature range is –40 to 125 °C.
5. Automotive-Grade devices (with an "–A" suffix) are identical in construction materials, topside marking, and electrical parameters to their Industrial-Grade (with an "–I" suffix) version counterparts. Automotive-Grade products are produced utilizing full automotive process flows and additional statistical process controls throughout the manufacturing flow. The Automotive-Grade part number is included on shipping labels.
6. In the top markings of each device, the Manufacturing Code represented by either “RTTTTT” or “TTTTTT” contains as its first character a letter in the range N through Z to indicate Automotive-Grade.

Table of Contents

1. Ordering Guide . . . 2

2. Functional Description . . . 5

2.1 Theory of Operation . . . 5

3. Device Operation . . . 6

3.1 Device Startup . . . 8

3.2 Undervoltage Lockout . . . 8

3.3 Layout Recommendations . . . 8

3.3.1 Supply Bypass . . . 8

3.3.2 Output Pin Termination . . . 8

4. Electrical Specifications . . . 9

5. Pin Descriptions . . . 30

5.1 Pin Descriptions (Si861x/2x Narrow Body SOIC-8) . . . 30

5.2 Pin Descriptions (Si863x) . . . 31

5.3 Pin Descriptions (Si864x) . . . 32

5.4 Pin Descriptions (Si8650/51/52) . . . 33

5.5 Pin Descriptions (Si866x) . . . 34

6. Package Outlines . . . 35

6.1 Package Outline (16-Pin Wide Body SOIC) . . . 35

6.2 Package Outline (16-Pin Narrow Body SOIC) . . . 37

6.3 Package Outline (8-Pin Narrow Body SOIC) . . . 39

7. Land Patterns . . . 40

7.1 Land Pattern (16-Pin Wide-Body SOIC) . . . 40

7.2 Land Pattern (16-Pin Narrow Body SOIC) . . . 41

7.3 Land Pattern (8-Pin Narrow Body SOIC) . . . 42

8. Top Markings . . . 43

8.1 Top Marking (16-Pin Wide Body SOIC) . . . 43

8.2 Top Marking (16-Pin Narrow Body SOIC) . . . 44

8.3 Top Marking (8-Pin Narrow Body SOIC) . . . 45

9. Revision History . . . 46

2. Functional Description

2.1 Theory of Operation

The operation of an Si86xx channel is analogous to that of an opto coupler, except an RF carrier is modulated instead of light. This simple architecture provides a robust isolated data path and requires no special considerations or initialization at start-up. A simplified block diagram for a single Si86xx channel is shown in the figure below.

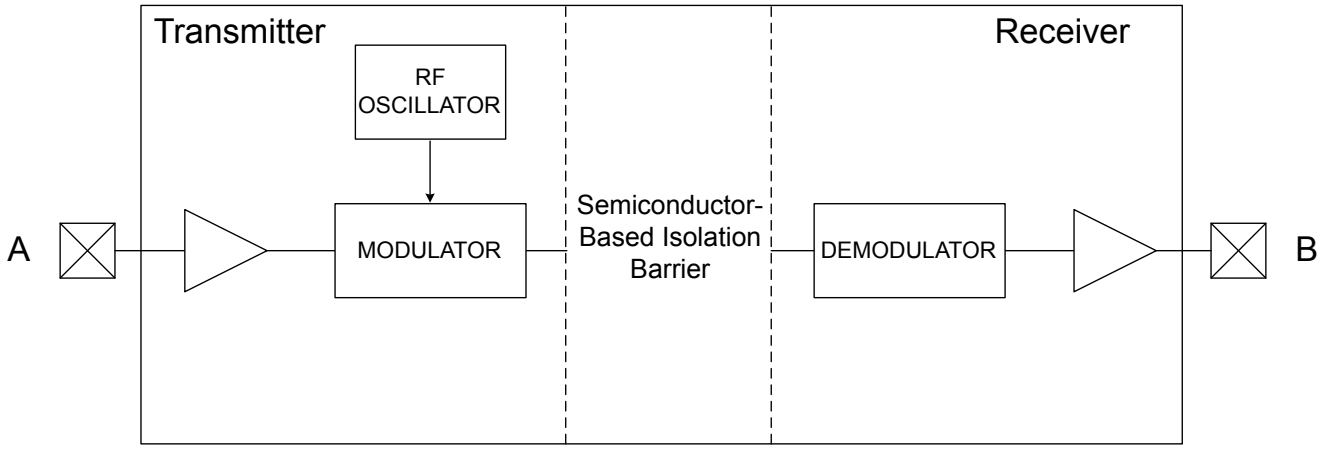

Figure 2.1. Simplified Channel Diagram

A channel consists of an RF Transmitter and RF Receiver separated by a semiconductor-based isolation barrier. Referring to the Transmitter, input A modulates the carrier provided by an RF oscillator using on/off keying. The Receiver contains a demodulator that decodes the input state according to its RF energy content and applies the result to output B via the output driver. This RF on/off keying scheme is superior to pulse code schemes as it provides best-in-class noise immunity, low power consumption, and better immunity to magnetic fields. See the figure below for more details.

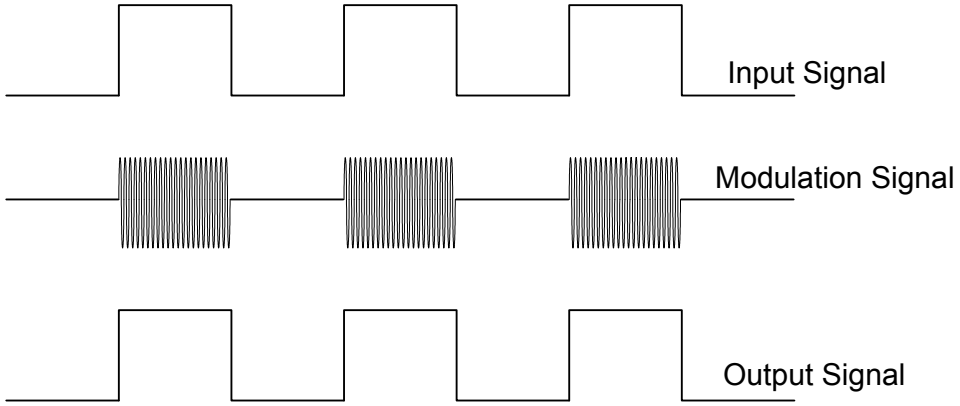

Figure 2.2. Modulation Scheme

3. Device Operation

Device behavior during start-up, normal operation, and shutdown is shown in Figure 3.1 Device Behavior during Normal Operation on page 8, where UVLO+ and UVLO- are the positive-going and negative-going thresholds respectively. Refer to the table below to determine outputs when power supply (VDD) is not present. Additionally, refer to Table 3.2 Enable Input Truth[1] on page 7 for logic conditions when enable pins are used.

Table 3.1. Si86xx Logic Operation

V_I Input[1,2]	EN Input[1,2,3,4]	VDDI State[1,5,6]	VDDO State[1,5,6]	V_O Output[1,2]	Comments
H	H or NC	P	P	H	Enabled, normal operation.
L	H or NC	P	P	L	
X[7]	L	P	P	Hi-Z[8]	Disabled.
X[7]	H or NC	UP	P	L	Upon transition of VDDI from unpowered to powered, V_O returns to the same state as V_I in less than 1 µs.
X[7]	L	UP	P	Hi-Z[8]	Disabled.
X[7]	X[7]	P	UP	Undetermined	Upon transition of VDDO from unpowered to powered, V_O returns to the same state as V_I within 1 µs, if EN is in either the H or NC state. Upon transition of VDDO from unpowered to powered, V_O returns to Hi-Z within 1 µs if EN is L.

Notes:

1. VDDI and VDDO are the input and output power supplies. V_I and V_O are the respective input and output terminals. EN is the enable control input located on the same output side.
2. X = not applicable; H = Logic High; L = Logic Low; Hi-Z = High Impedance.
3. It is recommended that the enable inputs be connected to an external logic high or low level when the Si86xx is operating in noisy environments.
4. No Connect (NC) replaces EN1 on some devices. No Connects are not internally connected and can be left floating, tied to VDD, or tied to GND.
5. “Powered” state (P) is defined as 2.5 V < VDD < 5.5 V.
6. “Unpowered” state (UP) is defined as VDD = 0 V.
7. Note that an I/O can power the die for a given side through an internal diode if its source has adequate current.
8. When using the enable pin (EN) function, the output pin state is driven into a high-impedance state when the EN pin is disabled (EN = 0).

Table 3.2. Enable Input Truth[1]

P/N	EN1[1,2]	EN2[1,2]	Operation
Si861x/2x	—	—	Outputs are enabled and follow input state.
Si8630	—	H	Outputs B1, B2, B3 are enabled and follow input state.
	—	L	Outputs B1, B2, B3 are disabled and in high impedance state.[3]
Si8631	H	X	Output A3 enabled and follows input state.
	L	X	Output A3 disabled and in high impedance state.[3]
	X	H	Outputs B1, B2 are enabled and follow input state.
	X	L	Outputs B1, B2 are disabled and in high impedance state.[3]
Si8640	—	H	Outputs B1, B2, B3, B4 are enabled and follow the input state.
	—	L	Outputs B1, B2, B3, B4 are disabled and in high impedance state.[3]
Si8641	H	X	Output A4 enabled and follows the input state.
	L	X	Output A4 disabled and in high impedance state.[3]
	X	H	Outputs B1, B2, B3 are enabled and follow the input state.
	X	L	Outputs B1, B2, B3 are disabled and in high impedance state.[3]
Si8642	H	X	Outputs A3 and A4 are enabled and follow the input state.
	L	X	Outputs A3 and A4 are disabled and in high impedance state.[3]
	X	H	Outputs B1 and B2 are enabled and follow the input state.
	X	L	Outputs B1 and B2 are disabled and in high impedance state.[3]
Si8650	—	H	Outputs B1, B2, B3, B4, B5 are enabled and follow input state.
	—	L	Outputs B1, B2, B3, B4, B5 are disabled and Logic Low or in high impedance state.[3]
Si8651	H	X	Output A5 enabled and follow input state.
	L	X	Output A5 disabled and in high impedance state.[3]
	X	H	Outputs B1, B2, B3, B4 are enabled and follow input state.
	X	L	Outputs B1, B2, B3, B4 are disabled and in high impedance state.[3]
Si8652	H	X	Outputs A4 and A5 are enabled and follow input state.
	L	X	Outputs A4 and A5 are disabled and in high impedance state.[3]
	X	H	Outputs B1, B2, B3 are enabled and follow input state.
	X	L	Outputs B1, B2, B3 are disabled and in high impedance state.[3]
Si866x	—	—	Outputs are enabled and follow input state.

Notes:

1. Enable inputs EN1 and EN2 can be used for multiplexing, for clock sync, or other output control. These inputs are internally pulled-up to local VDD by a 2 µA current source allowing them to be connected to an external logic level (high or low) or left floating. To minimize noise coupling, do not connect circuit traces to EN1 or EN2 if they are left floating. If EN1, EN2 are unused, it is recommended they be connected to an external logic level, especially if the Si86xx is operating in a noisy environment.
2. X = not applicable; H = Logic High; L = Logic Low.
3. When using the enable pin (EN) function, the output pin state is driven into a high-impedance state when the EN pin is disabled (EN = 0).

3.1 Device Startup

Outputs are held low during powerup until VDD is above the UVLO threshold for time period tSTART. Following this, the outputs follow the states of inputs.

3.2 Undervoltage Lockout

Undervoltage Lockout (UVLO) is provided to prevent erroneous operation during device startup and shutdown or when VDD is below its specified operating circuits range. Both Side A and Side B each have their own undervoltage lockout monitors. Each side can enter or exit UVLO independently. For example, Side A unconditionally enters UVLO when V_{DD1} falls below $V_{DD1(UVLO-)}$ and exits UVLO when V_{DD1} rises above $V_{DD1(UVLO+)}$. Side B operates the same as Side A with respect to its V_{DD2} supply.

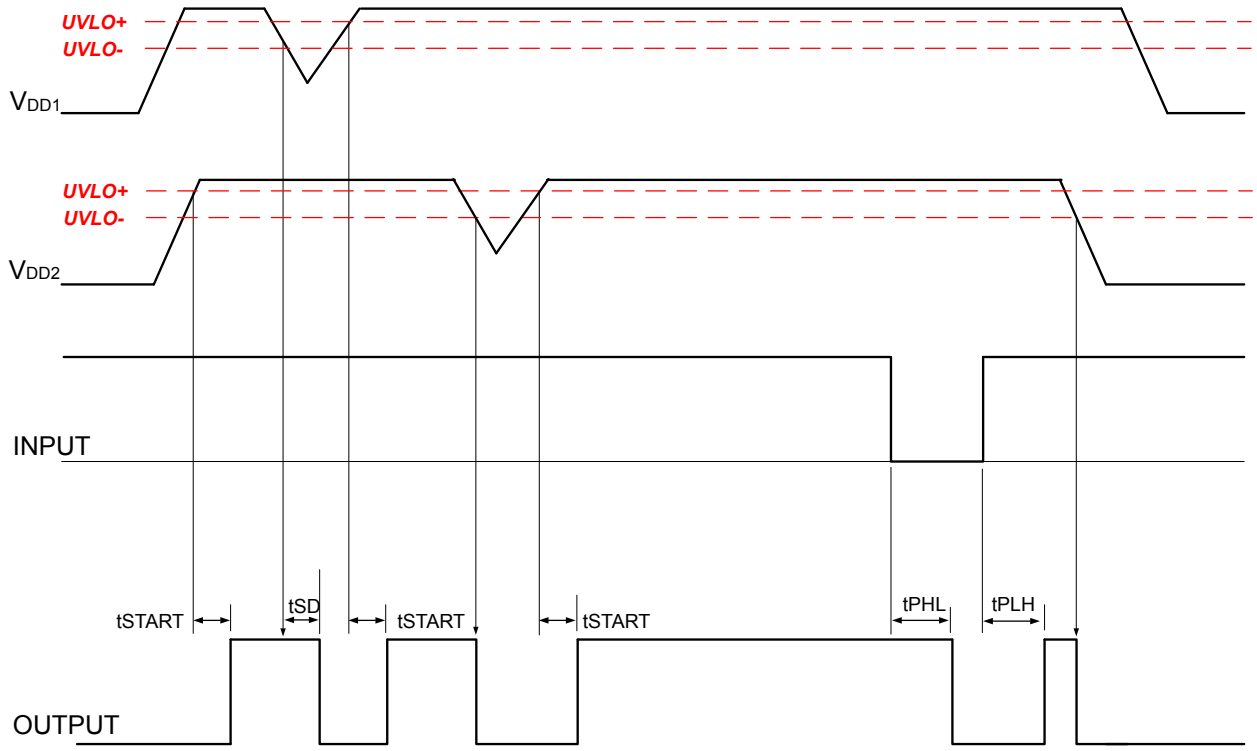

Figure 3.1. Device Behavior during Normal Operation

3.3 Layout Recommendations

To ensure safety in the end user application, high voltage circuits (i.e., circuits with >30 V_{AC}) must be physically separated from the safety extra-low voltage circuits (SELV is a circuit with <30 V_{AC}) by a certain distance (creepage/clearance). If a component, such as a digital isolator, straddles this isolation barrier, it must meet those creepage/clearance requirements and also provide a sufficiently large high-voltage breakdown protection rating (commonly referred to as working voltage protection). Table 4.5 Regulatory Information[1] on page 25 and Table 4.6 Insulation and Safety-Related Specifications on page 25 detail the working voltage and creepage/clearance capabilities of the Si86xx. These tables also detail the component standards (UL1577, IEC60747, CSA 5A), which are readily accepted by certification bodies to provide proof for end-system specifications requirements. Refer to the end-system specification (61010-1, 60950-1, 60601-1, etc.) requirements before starting any design that uses a digital isolator.

3.3.1 Supply Bypass

The Si86xx family requires a 0.1 µF bypass capacitor between V_{DD1} and GND1 and V_{DD2} and GND2. The capacitor should be placed as close as possible to the package. To enhance the robustness of a design, the user may also include resistors (50–300 Ω) in series with the inputs and outputs if the system is excessively noisy.

3.3.2 Output Pin Termination

The nominal output impedance of an isolator driver channel is approximately 50 Ω, ±40%, which is a combination of the value of the on-chip series termination resistor and channel resistance of the output driver FET. When driving loads where transmission line effects will be a factor, output pins should be appropriately terminated with controlled impedance PCB traces.

4. Electrical Specifications

Table 4.1. Recommended Operating Conditions

Parameter	Symbol	Min	Typ	Max	Unit
Ambient Operating Temperature[1]	T_A	–40	25	125	ºC
Supply Voltage	V_{DD1}	2.5	—	5.5	V
	V_{DD2}	2.5	—	5.5	V

Note:
1. The maximum ambient temperature is dependent on data frequency, output loading, number of operating channels, and supply voltage.

Table 4.2. Electrical Characteristics

(V_{DD1} = 5 V±10%, V_{DD2} = 5 V±10%, T_A = –40 to 125 °C)

Parameter	Symbol	Test Condition	Min	Typ	Max	Unit
VDD Undervoltage Threshold	VDDUV+	V_{DD1}, V_{DD2} rising	1.95	2.24	2.375	V
VDD Undervoltage Threshold	VDDUV–	V_{DD1}, V_{DD2} falling	1.88	2.16	2.325	V
VDD Undervoltage Hysteresis	VDD_{HYS}		50	70	95	mV
Positive-Going Input Threshold	VT+	All inputs rising	1.4	1.67	1.9	V
Negative-Going Input Threshold	VT–	All inputs falling	1.0	1.23	1.4	V
Input Hysteresis	V_{HYS}		0.38	0.44	0.50	V
High Level Input Voltage	V_{IH}		2.0	—	—	V
Low Level input voltage	V_{IL}		—	—	0.8	V
High Level Output Voltage	V_{OH}	Ioh = –4 mA	V_{DD1},V_{DD2} – 0.4	4.8	—	V
Low Level Output Voltage	V_{OL}	Iol = 4 mA	—	0.2	0.4	V
Input Leakage Current	I_L		—	—	±10	µA
Output Impedance[1]	Z_O		—	50	—	Ω
Enable Input High Current	I_{ENH}	$V_{ENx} = V_{IH}$	—	2.0	—	µA
Enable Input Low Current	I_{ENL}	$V_{ENx} = V_{IL}$	—	2.0	—	µA
DC Supply Current (All inputs 0 V or at Supply)						
Si8610Ax						
V_{DD1}		V_I = 0(Ax)	—	0.6	1.2	mA
V_{DD2}		V_I = 0(Ax)	—	0.8	1.5	
V_{DD1}		V_I = 1(Ax)	—	1.8	2.9	
V_{DD2}		V_I = 1(Ax)	—	0.8	1.5	

Parameter	Symbol	Test Condition	Min	Typ	Max	Unit
Si8620Ax						
V_{DD1}		V_I = 0(Ax)	—	0.8	1.4	mA
V_{DD2}		V_I = 0(Ax)	—	1.4	2.2	
V_{DD1}		V_I = 1(Ax)	—	3.3	5.3	
V_{DD2}		V_I = 1(Ax)	—	1.4	2.2	
Si8621Ax						
V_{DD1}		V_I = 0(Ax)	—	1.2	1.9	mA
V_{DD2}		V_I = 0(Ax)	—	1.2	1.9	
V_{DD1}		V_I = 1(Ax)	—	2.4	3.8	
V_{DD2}		V_I = 1(Ax)	—	2.4	3.8	
Si8630Ax						
V_{DD1}		V_I = 0(Ax)	—	0.9	1.6	mA
V_{DD2}		V_I = 0(Ax)	—	1.9	3.0	
V_{DD1}		V_I = 1(Ax)	—	4.6	7.4	
V_{DD2}		V_I = 1(Ax)	—	1.9	3.0	
Si8631Ax						
V_{DD1}		V_I = 0(Ax)	—	1.3	2.1	mA
V_{DD2}		V_I = 0(Ax)	—	1.7	2.7	
V_{DD1}		V_I = 1(Ax)	—	3.9	5.9	
V_{DD2}		V_I = 1(Ax)	—	3.0	4.5	
Si8640Ax						
V_{DD1}		V_I = 0(Ax)	—	1.0	1.6	mA
V_{DD2}		V_I = 0(Ax)	—	2.4	3.8	
V_{DD1}		V_I = 1(Ax)	—	6.1	9.2	
V_{DD2}		V_I = 1(Ax)	—	2.5	4.0	
Si8641Ax						
V_{DD1}		V_I = 0(Ax)	—	1.4	2.2	mA
V_{DD2}		V_I = 0(Ax)	—	2.3	3.7	
V_{DD1}		V_I = 1(Ax)	—	5.2	7.8	
V_{DD2}		V_I = 1(Ax)	—	3.6	5.4	
Si8642Ax						
V_{DD1}		V_I = 0(Ax)	—	1.8	2.9	mA
V_{DD2}		V_I = 0(Ax)	—	1.8	2.9	
V_{DD1}		V_I = 1(Ax)	—	4.4	6.6	
V_{DD2}		V_I = 1(Ax)	—	4.4	6.6	

Parameter	Symbol	Test Condition	Min	Typ	Max	Unit
Si8650Ax						
V_{DD1}		V_I = 0(Ax)	—	1.1	1.8	mA
V_{DD2}		V_I = 0(Ax)	—	3.1	4.7	
V_{DD1}		V_I = 1(Ax)	—	7.0	9.8	
V_{DD2}		V_I = 1(Ax)	—	3.3	5.0	
Si8651Ax						
V_{DD1}		V_I = 0(Ax)	—	1.5	2.4	mA
V_{DD2}		V_I = 0(Ax)	—	2.7	4.1	
V_{DD1}		V_I = 1(Ax)	—	6.6	9.2	
V_{DD2}		V_I = 1(Ax)	—	4.0	6.0	
Si8652Ax						
V_{DD1}		V_I = 0(Ax)	—	2.0	3.0	mA
V_{DD2}		V_I = 0(Ax)	—	2.4	3.6	
V_{DD1}		V_I = 1(Ax)	—	5.6	7.8	
V_{DD2}		V_I = 1(Ax)	—	5.0	7.5	
Si8660Ax						
V_{DD1}		V_I = 0(Ax)	—	1.2	1.9	mA
V_{DD2}		V_I = 0(Ax)	—	3.5	5.3	
V_{DD1}		V_I = 1(Ax)	—	8.8	12.3	
V_{DD2}		V_I = 1(Ax)	—	3.7	5.6	
Si8661Ax						
V_{DD1}		V_I = 0(Ax)	—	1.7	2.7	mA
V_{DD2}		V_I = 0(Ax)	—	3.4	5.1	
V_{DD1}		V_I = 1(Ax)	—	7.9	11.1	
V_{DD2}		V_I = 1(Ax)	—	4.8	7.2	
Si8662Ax						
V_{DD1}		V_I = 0(Ax)	—	2.2	3.3	mA
V_{DD2}		V_I = 0(Ax)	—	3.0	4.5	
V_{DD1}		V_I = 1(Ax)	—	7.5	10.5	
V_{DD2}		V_I = 1(Ax)	—	5.6	8.4	
Si8663Ax						
V_{DD1}		V_I = 0(Ax)	—	2.6	3.9	mA
V_{DD2}		V_I = 0(Ax)	—	2.6	3.9	
V_{DD1}		V_I = 1(Ax)	—	6.5	9.1	
V_{DD2}		V_I = 1(Ax)	—	6.5	9.1	

Parameter	Symbol	Test Condition	Min	Typ	Max	Unit
1 Mbps Supply Current (All inputs = 500 kHz square wave, CI = 15 pF on all Outputs)						
Si8610Ax						
V_{DD1}			—	1.2	2.0	mA
V_{DD2}			—	0.9	1.5	
Si8620Ax						
V_{DD1}			—	2.1	3.1	mA
V_{DD2}			—	1.6	2.4	
Si8621Ax						
V_{DD1}			—	1.9	2.9	mA
V_{DD2}			—	1.9	2.9	
Si8630Ax						
V_{DD1}			—	2.8	3.9	mA
V_{DD2}			—	2.2	3.1	
Si8631Ax						
V_{DD1}			—	2.7	3.8	mA
V_{DD2}			—	2.6	3.6	
Si8640Ax						
V_{DD1}			—	3.6	5.0	mA
V_{DD2}			—	2.9	4.0	
Si8641Ax						
V_{DD1}			—	3.4	4.8	mA
V_{DD2}			—	3.3	4.6	
Si8642Ax						
V_{DD1}			—	3.3	4.6	mA
V_{DD2}			—	3.3	4.6	
Si8650Ax						
V_{DD1}			—	4.1	5.7	mA
V_{DD2}			—	3.7	5.2	
Si8651Ax						
V_{DD1}			—	4.2	5.8	mA
V_{DD2}			—	3.8	5.3	
Si8652Ax						
V_{DD1}			—	4.0	5.6	mA
V_{DD2}			—	4.0	5.6	

Parameter	Symbol	Test Condition	Min	Typ	Max	Unit
Si8660Ax V_{DD1} V_{DD2}			 — —	 5.0 4.2	 7.0 5.9	mA
Si8661Ax V_{DD1} V_{DD2}			 — —	 4.9 4.6	 6.9 6.4	mA
Si8662Ax V_{DD1} V_{DD2}			 — —	 5.1 4.7	 7.1 6.6	mA
Si8663Ax V_{DD1} V_{DD2}			 — —	 4.9 4.9	 6.8 6.8	mA
Timing Characteristics						
All Models						
Maximum Data Rate			0	—	1	Mbps
Minimum Pulse Width			—	—	250	ns
Propagation Delay	t_{PHL}, t_{PLH}	See Figure 4.2 Propagation Delay Timing on page 14	—	—	35	ns
Pulse Width Distortion $\lvert t_{PLH} - t_{PHL} \rvert$	PWD	See Figure 4.2 Propagation Delay Timing on page 14	—	—	25	ns
Propagation Delay Skew[2]	$t_{PSK(P-P)}$		—	—	40	ns
Channel-Channel Skew	t_{PSK}		—	—	35	ns
Output Rise Time	t_r	C_L = 15 pF See Figure 4.2 Propagation Delay Timing on page 14	—	2.5	4.0	ns
Output Fall Time	t_f	C_L = 15 pF See Figure 4.2 Propagation Delay Timing on page 14	—	2.5	4.0	ns
Peak eye diagram jitter	$t_{JIT(PK)}$	See Figure 2.2 Modulation Scheme on page 5	—	350	—	ps
Common Mode Transient Immunity	CMTI	$V_I = V_{DD}$ or 0 V V_{CM} = 1500 V (See Figure 4.3 Common-Mode Transient Immunity Test Circuit on page 15)	35	50	—	kV/µs
Enable to Data Valid	t_{en1}	See Figure 4.1 ENABLE Timing Diagram on page 14	—	6.0	11	ns
Enable to Data Tri-State	t_{en2}	See Figure 4.1 ENABLE Timing Diagram on page 14	—	8.0	12	ns

Parameter	Symbol	Test Condition	Min	Typ	Max	Unit
Start-up Time[3]	t_{SU}		—	15	40	µs

Notes:

1. The nominal output impedance of an isolator driver channel is approximately 50 Ω, ±40%, which is a combination of the value of the on-chip series termination resistor and channel resistance of the output driver FET. When driving loads where transmission line effects will be a factor, output pins should be appropriately terminated with controlled impedance PCB traces.
2. $t_{PSK(P-P)}$ is the magnitude of the difference in propagation delay times measured between different units operating at the same supply voltages, load, and ambient temperature.
3. Start-up time is the time period from the application of power to valid data at the output.

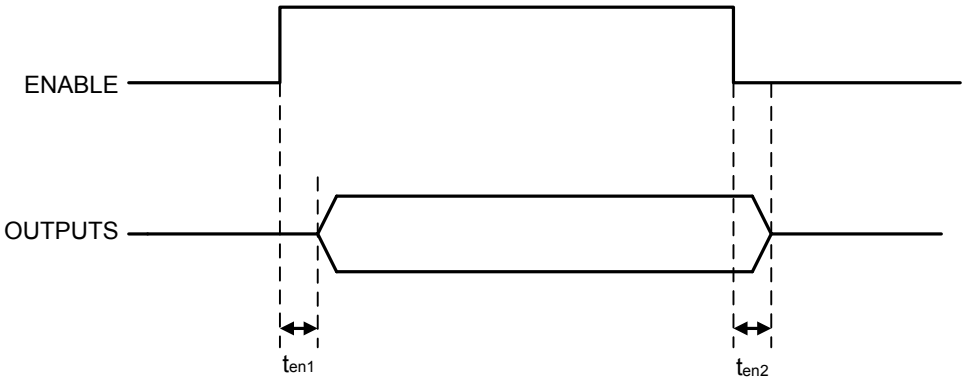

Figure 4.1. ENABLE Timing Diagram

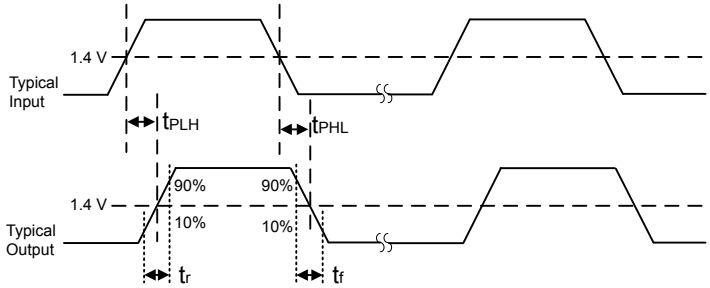

Figure 4.2. Propagation Delay Timing

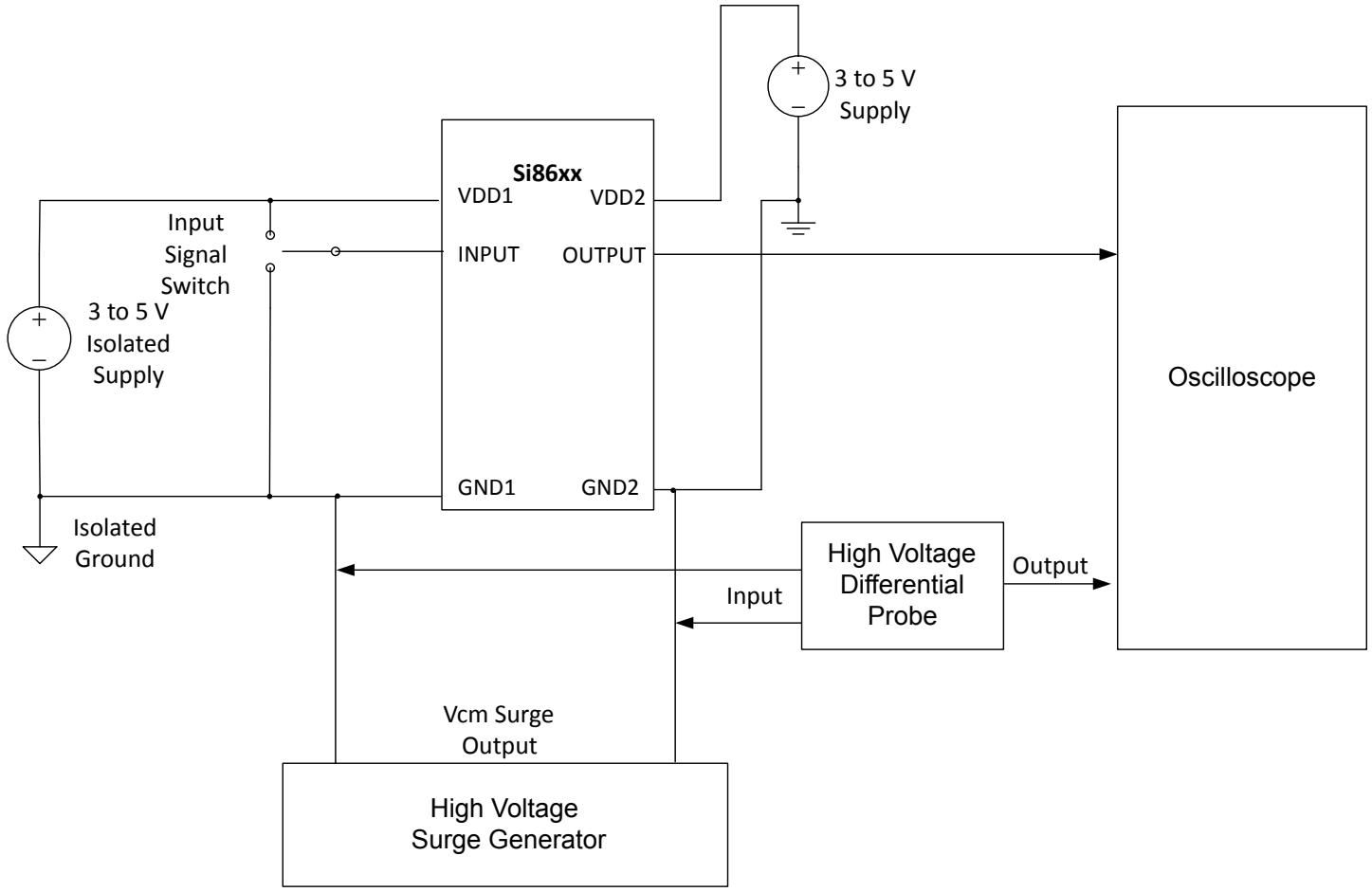

Figure 4.3. Common-Mode Transient Immunity Test Circuit

Table 4.3. Electrical Characteristics

(V_{DD1} = 3.3 V±10%, V_{DD2} = 3.3 V±10%, T_A = –40 to 125 °C)

Parameter	Symbol	Test Condition	Min	Typ	Max	Unit
VDD Undervoltage Threshold	VDDUV+	V_{DD1}, V_{DD2} rising	1.95	2.24	2.375	V
VDD Undervoltage Threshold	VDDUV–	V_{DD1}, V_{DD2} falling	1.88	2.16	2.325	V
VDD Undervoltage Hysteresis	VDD_{HYS}		50	70	95	mV
Positive-Going Input Threshold	VT+	All inputs rising	1.4	1.67	1.9	V
Negative-Going Input Threshold	VT–	All inputs falling	1.0	1.23	1.4	V
Input Hysteresis	V_{HYS}		0.38	0.44	0.50	V
High Level Input Voltage	V_{IH}		2.0	—	—	V
Low Level Input Voltage	V_{IL}		—	—	0.8	V
High Level Output Voltage	V_{OH}	Ioh = –4 mA	V_{DD1}, V_{DD2} – 0.4	3.1	—	V
Low Level Output Voltage	V_{OL}	Iol = 4 mA	—	0.2	0.4	V

Parameter	Symbol	Test Condition	Min	Typ	Max	Unit
Input Leakage Current	I_L		—	—	±10	µA
Output Impedance[1]	Z_O		—	50	—	Ω
Enable Input High Current	I_{ENH}	$V_{ENx} = V_{IH}$	—	2.0	—	µA
Enable Input Low Current	I_{ENL}	$V_{ENx} = V_{IL}$	—	2.0	—	µA
DC Supply Current (All inputs 0 V or at supply)						
Si8610Ax						
V_{DD1}		V_I = 0(Ax)	—	0.6	1.2	mA
V_{DD2}		V_I = 0(Ax)	—	0.8	1.5	
V_{DD1}		V_I = 1(Ax)	—	1.8	2.9	
V_{DD2}		V_I = 1(Ax)	—	0.8	1.5	
Si8620Ax						
V_{DD1}		V_I = 0(Ax)	—	0.8	1.4	mA
V_{DD2}		V_I = 0(Ax)	—	1.4	2.2	
V_{DD1}		V_I = 1(Ax)	—	3.3	5.3	
V_{DD2}		V_I = 1(Ax)	—	1.4	2.2	
Si8621Ax						
V_{DD1}		V_I = 0(Ax)	—	1.2	1.9	mA
V_{DD2}		V_I = 0(Ax)	—	1.2	1.9	
V_{DD1}		V_I = 1(Ax)	—	2.4	3.8	
V_{DD2}		V_I = 1(Ax)	—	2.4	3.8	
Si8630Ax						
V_{DD1}		V_I = 0(Ax)	—	0.9	1.6	mA
V_{DD2}		V_I = 0(Ax)	—	1.9	3.0	
V_{DD1}		V_I = 1(Ax)	—	4.6	7.4	
V_{DD2}		V_I = 1(Ax)	—	1.9	3.0	
Si8631Ax						
V_{DD1}		V_I = 0(Ax)	—	1.3	2.1	mA
V_{DD2}		V_I = 0(Ax)	—	1.7	2.7	
V_{DD1}		V_I = 1(Ax)	—	3.9	5.9	
V_{DD2}		V_I = 1(Ax)	—	3.0	4.5	
Si8640Ax						
V_{DD1}		V_I = 0(Ax)	—	1.0	1.6	mA
V_{DD2}		V_I = 0(Ax)	—	2.4	3.8	
V_{DD1}		V_I = 1(Ax)	—	6.1	9.2	
V_{DD2}		V_I = 1(Ax)	—	2.5	4.0	

Parameter	Symbol	Test Condition	Min	Typ	Max	Unit
Si8641Ax						
V_{DD1}		V_I = 0(Ax)	—	1.4	2.2	mA
V_{DD2}		V_I = 0(Ax)	—	2.3	3.7	
V_{DD1}		V_I = 1(Ax)	—	5.2	7.8	
V_{DD2}		V_I = 1(Ax)	—	3.6	5.4	
Si8642Ax						
V_{DD1}		V_I = 0(Ax)	—	1.8	2.9	mA
V_{DD2}		V_I = 0(Ax)	—	1.8	2.9	
V_{DD1}		V_I = 1(Ax)	—	4.4	6.6	
V_{DD2}		V_I = 1(Ax)	—	4.4	6.6	
Si8650Ax						
V_{DD1}		V_I = 0(Ax)	—	1.1	1.8	mA
V_{DD2}		V_I = 0(Ax)	—	3.1	4.7	
V_{DD1}		V_I = 1(Ax)	—	7.0	9.8	
V_{DD2}		V_I = 1(Ax)	—	3.3	5.0	
Si8651Ax						
V_{DD1}		V_I = 0(Ax)	—	1.5	2.4	mA
V_{DD2}		V_I = 0(Ax)	—	2.7	4.1	
V_{DD1}		V_I = 1(Ax)	—	6.6	9.2	
V_{DD2}		V_I = 1(Ax)	—	4.0	6.0	
Si8652Ax						
V_{DD1}		V_I = 0(Ax)	—	2.0	3.0	mA
V_{DD2}		V_I = 0(Ax)	—	2.4	3.6	
V_{DD1}		V_I = 1(Ax)	—	5.6	7.8	
V_{DD2}		V_I = 1(Ax)	—	5.0	7.5	
Si8660Ax						
V_{DD1}		V_I = 0(Ax)	—	1.2	1.9	mA
V_{DD2}		V_I = 0(Ax)	—	3.5	5.3	
V_{DD1}		V_I = 1(Ax)	—	8.8	12.3	
V_{DD2}		V_I = 1(Ax)	—	3.7	5.6	
Si8661Ax						
V_{DD1}		V_I = 0(Ax)	—	1.7	2.7	mA
V_{DD2}		V_I = 0(Ax)	—	3.4	5.1	
V_{DD1}		V_I = 1(Ax)	—	7.9	11.1	
V_{DD2}		V_I = 1(Ax)	—	4.8	7.2	

Parameter	Symbol	Test Condition	Min	Typ	Max	Unit
Si8662Ax						
V_{DD1}		V_I = 0(Ax)	—	2.2	3.3	mA
V_{DD2}		V_I = 0(Ax)	—	3.0	4.5	
V_{DD1}		V_I = 1(Ax)	—	7.5	10.5	
V_{DD2}		V_I = 1(Ax)	—	5.6	8.4	
Si8663Ax						
V_{DD1}		V_I = 0(Ax)	—	2.6	3.9	mA
V_{DD2}		V_I = 0(Ax)	—	2.6	3.9	
V_{DD1}		V_I = 1(Ax)	—	6.5	9.1	
V_{DD2}		V_I = 1(Ax)	—	6.5	9.1	
1 Mbps Supply Current (All inputs = 500 kHz square wave, CI = 15 pF on all outputs)						
Si8610Ax						
V_{DD1}			—	1.2	2.0	mA
V_{DD2}			—	0.9	1.5	
Si8620Ax						
V_{DD1}			—	2.1	3.1	mA
V_{DD2}			—	1.6	2.4	
Si8621Ax						
V_{DD1}			—	1.9	2.9	mA
V_{DD2}			—	1.9	2.9	
Si8630Ax						
V_{DD1}			—	2.8	3.9	mA
V_{DD2}			—	2.2	3.1	
Si8631Ax						
V_{DD1}			—	2.7	3.8	mA
V_{DD2}			—	2.6	3.6	
Si8640Ax						
V_{DD1}			—	3.6	5.0	mA
V_{DD2}			—	2.9	4.0	
Si8641Ax						
V_{DD1}			—	3.4	4.8	mA
V_{DD2}			—	3.3	4.6	
Si8642Ax						
V_{DD1}			—	3.3	4.6	mA
V_{DD2}			—	3.3	4.6	

Parameter	Symbol	Test Condition	Min	Typ	Max	Unit
Si8650Ax						
V_{DD1}			—	4.1	5.7	mA
V_{DD2}			—	3.7	5.2	
Si8651Ax						
V_{DD1}			—	4.2	5.8	mA
V_{DD2}			—	3.8	5.3	
Si8652Ax						
V_{DD1}			—	4.0	5.6	mA
V_{DD2}			—	4.0	5.6	
Si8660Ax						
V_{DD1}			—	5.0	7.0	mA
V_{DD2}			—	4.2	5.9	
Si8661Ax						
V_{DD1}			—	4.9	6.9	mA
V_{DD2}			—	4.6	6.4	
Si8662Ax						
V_{DD1}			—	5.1	7.1	mA
V_{DD2}			—	4.7	6.6	
Si8663Ax						
V_{DD1}			—	4.9	6.8	mA
V_{DD2}			—	4.9	6.8	
Timing Characteristics						
All Models						
Maximum Data Rate			0	—	1	Mbps
Minimum Pulse Width			—	—	250	ns
Propagation Delay	t_{PHL}, t_{PLH}	See Figure 4.2 Propagation Delay Timing on page 14	—	—	35	ns
Pulse Width Distortion $\lvert t_{PLH} - t_{PHL} \rvert$	PWD	See Figure 4.2 Propagation Delay Timing on page 14	—	—	25	ns
Propagation Delay Skew[2]	$t_{PSK(P-P)}$		—	—	40	ns
Channel-Channel Skew	t_{PSK}		—	—	35	ns
Output Rise Time	t_r	C_L = 15 pF See Figure 4.2 Propagation Delay Timing on page 14	—	2.5	4.0	ns

Parameter	Symbol	Test Condition	Min	Typ	Max	Unit
Output Fall Time	t_f	C_L = 15 pF See Figure 4.2 Propagation Delay Timing on page 14	—	2.5	4.0	ns
Peak eye diagram jitter	$t_{JIT(PK)}$	See Figure 2.2 Modulation Scheme on page 5	—	350	—	ps
Common Mode Transient Immunity	CMTI	V_I = V_{DD} or 0 V V_{CM} = 1500 V (see Figure 4.3 Common-Mode Transient Immunity Test Circuit on page 15)	35	50	—	kV/µs
Enable to Data Valid	t_{en1}	See Figure 4.1 ENABLE Timing Diagram on page 14	—	6.0	11	ns
Enable to Data Tri-State	t_{en2}	See Figure 4.1 ENABLE Timing Diagram on page 14	—	8.0	12	ns
Start-Up Time[3]	t_{SU}		—	15	40	µs

Notes:

1. The nominal output impedance of an isolator driver channel is approximately 50 Ω, ±40%, which is a combination of the value of the on-chip series termination resistor and channel resistance of the output driver FET. When driving loads where transmission line effects will be a factor, output pins should be appropriately terminated with controlled impedance PCB traces.
2. $t_{PSK(P-P)}$ is the magnitude of the difference in propagation delay times measured between different units operating at the same supply voltages, load, and ambient temperature.
3. Start-up time is the time period from the application of power to valid data at the output.

Table 4.4. Electrical Characteristics

(V_{DD1} = 2.5 V ±5%, V_{DD2} = 2.5 V ±5%, T_A = –40 to 125 °C)

Parameter	Symbol	Test Condition	Min	Typ	Max	Unit
VDD Undervoltage Threshold	VDDUV+	V_{DD1}, V_{DD2} rising	1.95	2.24	2.375	V
VDD Undervoltage Threshold	VDDUV–	V_{DD1}, V_{DD2} falling	1.88	2.16	2.325	V
VDD Undervoltage Hysteresis	VDD_{HYS}		50	70	95	mV
Positive-Going Input Threshold	VT+	All inputs rising	1.4	1.67	1.9	V
Negative-Going Input Threshold	VT–	All inputs falling	1.0	1.23	1.4	V
Input Hysteresis	V_{HYS}		0.38	0.44	0.50	V
High Level Input Voltage	V_{IH}		2.0	—	—	V
Low Level Input Voltage	V_{IL}		—	—	0.8	V
High Level Output Voltage	V_{OH}	Ioh = –4 mA	V_{DD1},V_{DD2} – 0.4	2.3	—	V
Low Level Output Voltage	V_{OL}	Iol = 4 mA	—	0.2	0.4	V
Input Leakage Current	I_L		—	—	±10	µA
Output Impedance[1]	Z_O		—	50	—	Ω

Parameter	Symbol	Test Condition	Min	Typ	Max	Unit
Enable Input High Current	I_{ENH}	$V_{ENx} = V_{IH}$	—	2.0	—	µA
Enable Input Low Current	I_{ENL}	$V_{ENx} = V_{IL}$	—	2.0	—	µA
DC Supply Current (All inputs 0 V or at supply)						
Si8610Ax						
V_{DD1}		V_I = 0(Ax)	—	0.6	1.2	mA
V_{DD2}		V_I = 0(Ax)	—	0.8	1.5	
V_{DD1}		V_I = 1(Ax)	—	1.8	2.9	
V_{DD2}		V_I = 1(Ax)	—	0.8	1.5	
Si8620Ax						
V_{DD1}		V_I = 0(Ax)	—	0.8	1.4	mA
V_{DD2}		V_I = 0(Ax)	—	1.4	2.2	
V_{DD1}		V_I = 1(Ax)	—	3.3	5.3	
V_{DD2}		V_I = 1(Ax)	—	1.4	2.2	
Si8621Ax						
V_{DD1}		V_I = 0(Ax)	—	1.2	1.9	mA
V_{DD2}		V_I = 0(Ax)	—	1.2	1.9	
V_{DD1}		V_I = 1(Ax)	—	2.4	3.8	
V_{DD2}		V_I = 1(Ax)	—	2.4	3.8	
Si8630Ax						
V_{DD1}		V_I = 0(Ax)	—	0.9	1.6	mA
V_{DD2}		V_I = 0(Ax)	—	1.9	3.0	
V_{DD1}		V_I = 1(Ax)	—	4.6	7.4	
V_{DD2}		V_I = 1(Ax)	—	1.9	3.0	
Si8631Ax						
V_{DD1}		V_I = 0(Ax)	—	1.3	2.1	mA
V_{DD2}		V_I = 0(Ax)	—	1.7	2.7	
V_{DD1}		V_I = 1(Ax)	—	3.9	5.9	
V_{DD2}		V_I = 1(Ax)	—	3.0	4.5	
Si8640Ax						
V_{DD1}		V_I = 0(Ax)	—	1.0	1.6	mA
V_{DD2}		V_I = 0(Ax)	—	2.4	3.8	
V_{DD1}		V_I = 1(Ax)	—	6.1	9.2	
V_{DD2}		V_I = 1(Ax)	—	2.5	4.0	

Parameter	Symbol	Test Condition	Min	Typ	Max	Unit
Si8641Ax						
V_{DD1}		V_I = 0(Ax)	—	1.4	2.2	mA
V_{DD2}		V_I = 0(Ax)	—	2.3	3.7	
V_{DD1}		V_I = 1(Ax)	—	5.2	7.8	
V_{DD2}		V_I = 1(Ax)	—	3.6	5.4	
Si8642Ax						
V_{DD1}		V_I = 0(Ax)	—	1.8	2.9	mA
V_{DD2}		V_I = 0(Ax)	—	1.8	2.9	
V_{DD1}		V_I = 1(Ax)	—	4.4	6.6	
V_{DD2}		V_I = 1(Ax)	—	4.4	6.6	
Si8650Ax						
V_{DD1}		V_I = 0(Ax)	—	1.1	1.8	mA
V_{DD2}		V_I = 0(Ax)	—	3.1	4.7	
V_{DD1}		V_I = 1(Ax)	—	7.0	9.8	
V_{DD2}		V_I = 1(Ax)	—	3.3	5.0	
Si8651Ax						
V_{DD1}		V_I = 0(Ax)	—	1.5	2.4	mA
V_{DD2}		V_I = 0(Ax)	—	2.7	4.1	
V_{DD1}		V_I = 1(Ax)	—	6.6	9.2	
V_{DD2}		V_I = 1(Ax)	—	4.0	6.0	
Si8652Ax						
V_{DD1}		V_I = 0(Ax)	—	2.0	3.0	mA
V_{DD2}		V_I = 0(Ax)	—	2.4	3.6	
V_{DD1}		V_I = 1(Ax)	—	5.6	7.8	
V_{DD2}		V_I = 1(Ax)	—	5.0	7.5	
Si8660Ax						
V_{DD1}		V_I = 0(Ax)	—	1.2	1.9	mA
V_{DD2}		V_I = 0(Ax)	—	3.5	5.3	
V_{DD1}		V_I = 1(Ax)	—	8.8	12.3	
V_{DD2}		V_I = 1(Ax)	—	3.7	5.6	
Si8661Ax						
V_{DD1}		V_I = 0(Ax)	—	1.7	2.7	mA
V_{DD2}		V_I = 0(Ax)	—	3.4	5.1	
V_{DD1}		V_I = 1(Ax)	—	7.9	11.1	
V_{DD2}		V_I = 1(Ax)	—	4.8	7.2	

Parameter	Symbol	Test Condition	Min	Typ	Max	Unit
Si8662Ax						
V_{DD1}		V_I = 0(Ax)	—	2.2	3.3	mA
V_{DD2}		V_I = 0(Ax)	—	3.0	4.5	
V_{DD1}		V_I = 1(Ax)	—	7.5	10.5	
V_{DD2}		V_I = 1(Ax)	—	5.6	8.4	
Si8663Ax						
V_{DD1}		V_I = 0(Ax)	—	2.6	3.9	mA
V_{DD2}		V_I = 0(Ax)	—	2.6	3.9	
V_{DD1}		V_I = 1(Ax)	—	6.5	9.1	
V_{DD2}		V_I = 1(Ax)	—	6.5	9.1	
1 Mbps Supply Current (All inputs = 500 kHz square wave, CI = 15 pF on all outputs)						
Si8610Ax						
V_{DD1}			—	1.2	2.0	mA
V_{DD2}			—	0.9	1.5	
Si8620Ax						
V_{DD1}			—	2.1	3.1	mA
V_{DD2}			—	1.6	2.4	
Si8621Ax						
V_{DD1}			—	1.9	—	mA
V_{DD2}			—	1.9	—	
Si8630Ax						
V_{DD1}			—	2.8	3.9	mA
V_{DD2}			—	2.2	3.1	
Si8631Ax						
V_{DD1}			—	2.7	3.8	mA
V_{DD2}			—	2.6	3.6	
Si8640Ax						
V_{DD1}			—	3.6	5.0	mA
V_{DD2}			—	2.9	4.0	
Si8641Ax						
V_{DD1}			—	3.4	4.8	mA
V_{DD2}			—	3.3	4.6	
Si8642Ax						
V_{DD1}			—	3.3	4.6	mA
V_{DD2}			—	3.3	4.6	

Parameter	Symbol	Test Condition	Min	Typ	Max	Unit
Si8650Ax						
V_{DD1}			—	4.1	5.7	mA
V_{DD2}			—	3.7	5.2	
Si8651Ax						
V_{DD1}			—	4.2	5.8	mA
V_{DD2}			—	3.8	5.3	
Si8652Ax						
V_{DD1}			—	4.0	5.6	mA
V_{DD2}			—	4.0	5.6	
Si8660Ax						
V_{DD1}			—	5.0	7.0	mA
V_{DD2}			—	4.2	5.9	
Si8661Ax						
V_{DD1}			—	4.9	6.9	mA
V_{DD2}			—	4.6	6.4	
Si8662Ax						
V_{DD1}			—	5.1	7.1	mA
V_{DD2}			—	4.7	6.6	
Si8663Ax						
V_{DD1}			—	4.9	6.8	mA
V_{DD2}			—	4.9	6.8	
Timing Characteristics						
All Models						
Maximum Data Rate			0	—	1	Mbps
Minimum Pulse Width			—	—	250	ns
Propagation Delay	t_{PHL}, t_{PLH}	See Figure 4.2 Propagation Delay Timing on page 14	—	—	35	ns
Pulse Width Distortion $\lvert t_{PLH} - t_{PHL} \rvert$	PWD	See Figure 4.2 Propagation Delay Timing on page 14	—	—	25	ns
Propagation Delay Skew[2]	$t_{PSK(P-P)}$		—	—	40	ns
Channel-Channel Skew	t_{PSK}		—	—	35	ns
Output Rise Time	t_r	C_L = 15 pF See Figure 4.2 Propagation Delay Timing on page 14	—	2.5	4.0	ns
Output Fall Time	t_f	C_L = 15 pF See Figure 4.2 Propagation Delay Timing on page 14	—	2.5	4.0	ns

Parameter	Symbol	Test Condition	Min	Typ	Max	Unit
Peak Eye Diagram Jitter	$t_{JIT(PK)}$	See Figure 2.2 Modulation Scheme on page 5	—	350	—	ps
Common Mode Transient Immunity	CMTI	$V_I = V_{DD}$ or 0 V V_{CM} = 1500 V (see Figure 4.3 Common-Mode Transient Immunity Test Circuit on page 15)	35	50	—	kV/µs
Enable to Data Valid	t_{en1}	See Figure 4.1 ENABLE Timing Diagram on page 14	—	6.0	11	ns
Enable to Data Tri-State	t_{en2}	See Figure 4.1 ENABLE Timing Diagram on page 14	—	8.0	12	ns
Startup Time[3]	t_{SU}		—	15	40	µs

Notes:

1. The nominal output impedance of an isolator driver channel is approximately 50 Ω, ±40%, which is a combination of the value of the on-chip series termination resistor and channel resistance of the output driver FET. When driving loads where transmission line effects will be a factor, output pins should be appropriately terminated with controlled impedance PCB traces.
2. $t_{PSK(P-P)}$ is the magnitude of the difference in propagation delay times measured between different units operating at the same supply voltages, load, and ambient temperature.
3. Start-up time is the time period from the application of power to valid data at the output.

Table 4.5. Regulatory Information[1]

CSA
The Si86xx is certified under CSA Component Acceptance Notice 5A, IEC61010-1 and IEC60950-1. For more details, see File 232873.
VDE
The Si86xx is certified according to IEC 60747-5-2. For more details, see File 5006301-4880-0001.
UL
The Si86xx is certified under UL1577 component recognition program. For more details, see File E257455.
CQC
The Si86xx is certified under GB4943.1-2011. For more details, see certificates CQC13001096110 and CQC13001096239.

Note:

1. Regulatory Certifications apply to 2.5 kV_{RMS} rated devices which are production tested to 3.0 kV_{RMS} for 1 sec. For more information, see 5.5 Pin Descriptions (Si866x).

Table 4.6. Insulation and Safety-Related Specifications

Parameter	Symbol	Test Condition	Value			Unit
			WB SOIC-16	NB SOIC-16	NB SOIC-8	
Nominal Air Gap (Clearance)[1]	L(IO1)		8.0	4.9	4.9	mm
Nominal External Tracking (Creepage)[1]	L(IO2)		8.0	4.01	4.01	mm
Minimum Internal Gap (Internal Clearance)			0.014	0.014	0.014	mm

Parameter	Symbol	Test Condition	Value			Unit
			WB SO-IC-16	NB SO-IC-16	NB SOIC-8	
Tracking Resistance (Proof Tracking Index)	PTI	IEC60112	600	600	600	V_{RMS}
Erosion Depth	ED		0.019	0.019	0.040	mm
Resistance (Input-Output)[2]	R_{IO}		10^{12}	10^{12}	10^{12}	Ω
Capacitance (Input-Output)[2]	X_{IO}	f = 1 MHz	2.0	2.0	2.0	pF
Input Capacitance[3]	C_I		4.0	4.0	4.0	pF

Notes:

1. The values in this table correspond to the nominal creepage and clearance values. VDE certifies the clearance and creepage limits as 4.7 mm minimum for the NB SOIC-16 and SOIC-8 packages and 8.5 mm minimum for the WB SOIC-16 package. UL does not impose a clearance and creepage minimum for component-level certifications. CSA certifies the clearance and creepage limits as 3.9 mm minimum for the NB SOIC-16 and SOIC-8 and 7.6 mm minimum for the WB SOIC-16 package.
2. To determine resistance and capacitance, the Si86xx is converted into a 2-terminal device. Pins 1–8 (Pins 1-4 for the NB SOIC-8) are shorted together to form the first terminal and pins 9–16 (Pins 5-8 for the NB SOIC-8) are shorted together to form the second terminal. The parameters are then measured between these two terminals.
3. Measured from input pin to ground.

Table 4.7. IEC 60664-1 (VDE 0844 Part 2) Ratings

Parameter	Test Conditions	Specification	
		NB SOIC-16 NB SOIC-8	WB SOIC-16
Basic Isolation Group	Material Group	I	I
Installation Classification	Rated Mains Voltages < 150 V_{RMS}	I-IV	I-IV
	Rated Mains Voltages < 300 V_{RMS}	I-III	I-IV
	Rated Mains Voltages < 400 V_{RMS}	I-II	I-III
	Rated Mains Voltages < 600 V_{RMS}	I-II	I-III

Table 4.8. IEC 60747-5-2 Insulation Characteristics for Si86xxxx*

Parameter	Symbol	Test Condition	Characteristic		Unit
			WB SOIC-16	NB SOIC-16 SOIC-8	
Maximum Working Insulation Voltage	V_{IORM}		1200	630	Vpeak
Input to Output Test Voltage	V_{PR}	Method b1 (V_{IORM} x 1.875 = V_{PR}, 100% Production Test, t_m = 1 sec, Partial Discharge < 5 pC)	2250	1182	
Transient Overvoltage	V_{IOTM}	t = 60 sec	6000	6000	Vpeak
Pollution Degree (DIN VDE 0110, Table 1)			2	2	

Parameter	Symbol	Test Condition	Characteristic		Unit
			WB SOIC-16	NB SOIC-16 SOIC-8	
Insulation Resistance at T_S, V_{IO} = 500 V	R_S		$>10^9$	$>10^9$	Ω
Note: Maintenance of the safety data is ensured by protective circuits. The Si86xxxx provides a climate classification of 40/125/21.					

Table 4.9. IEC Safety Limiting Values[1]

Parameter	Symbol	Test Condition	Max			Unit
			WB SOIC-16	NB SOIC-16	NB SOIC-8	
Case Temperature	T_S		150	150	150	°X
Safety Input, Output, or Supply Current	I_S	θ_{JA} = 100 °C/W (WB SOIC-16), 105 °C/W (NB SOIC-16), 140 °C/W (NB SOIC-8), V_I = 5.5 V, T_J = 150 °C, T_A = 25 °C	220	215	160	mA
Device Power Dissipation[2]	P_D		415	415	150	mW

Notes:

1. Maximum value allowed in the event of a failure; also see the thermal derating curve in Figure 4.4 Figure 5.4 on page 28, Figure 4.5 Figure 5.5 on page 28 and Figure 4.6 Figure 5.6 on page 29.
2. The Si86xx is tested with VDD1 = VDD2 = 5.5 V, T_J = 150 ºC, C_L = 15 pF, input a 150 Mbps 50% duty cycle square wave.

Table 4.10. Thermal Characteristics

Parameter	Symbol	WB SOIC-16	NB SOIC-16	NB SOIC-8	Unit
IC Junction-to-Air Thermal Resistance	θ_{JA}	100	105	140	ºC/W

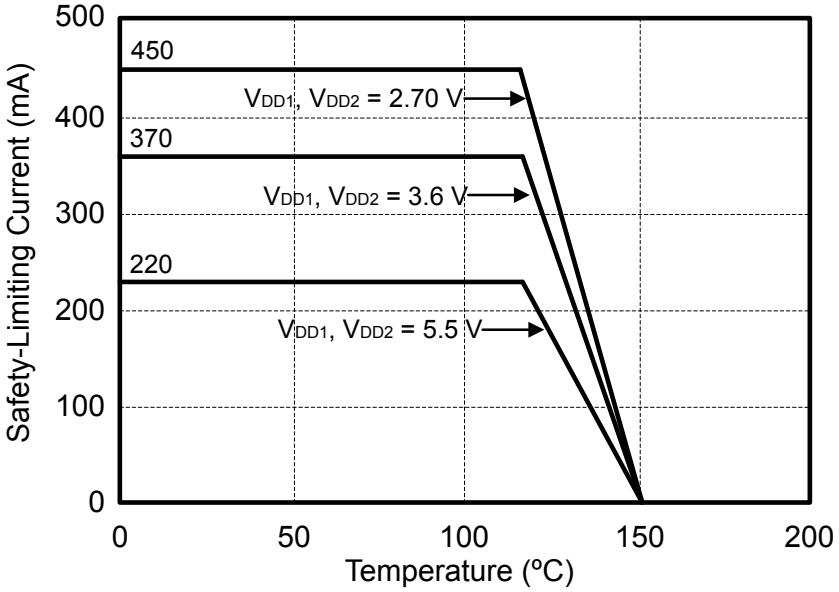

Figure 4.4. (WB SOIC-16) Thermal Derating Curve, Dependence of Safety Limiting Values with Case Temperature per DIN EN 60747-5-2

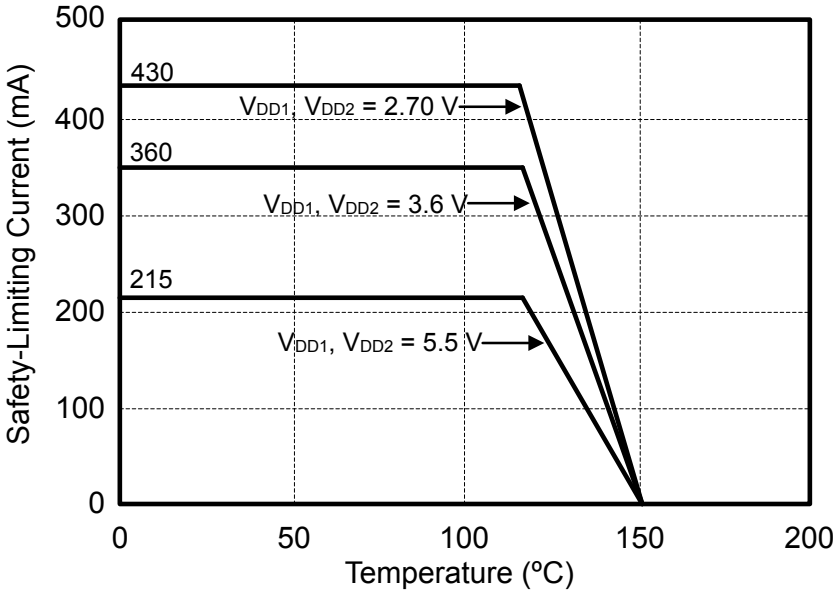

Figure 4.5. (NB SOIC-16) Thermal Derating Curve, Dependence of Safety Limiting Values with Case Temperature per DIN EN 60747-5-2

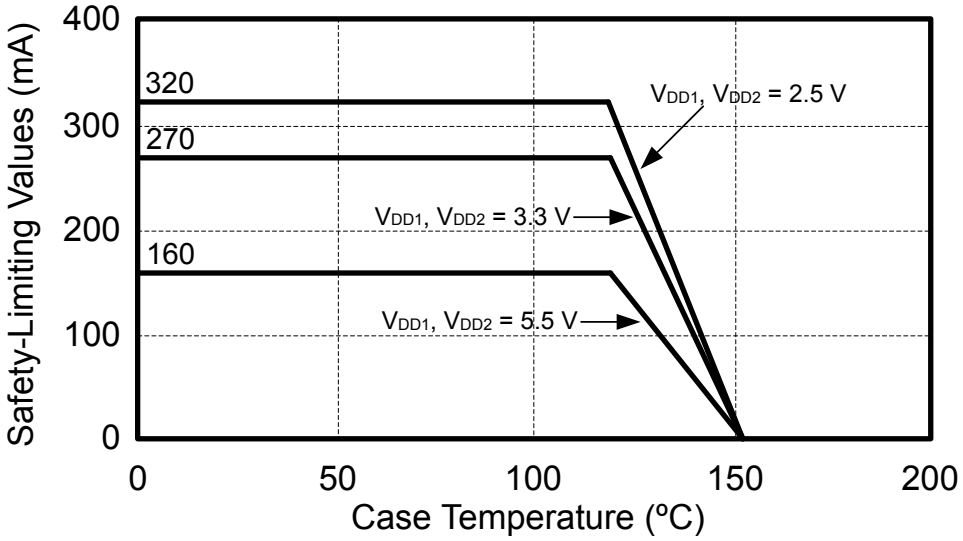

Figure 4.6. (NB SOIC-8) Thermal Derating Curve, Dependence of Safety Limiting Values with Case Temperature per DIN EN 60747-5-2

Table 4.11. Absolute Maximum Ratings[1]

Parameter	Symbol	Min	Max	Unit
Storage Temperature[2]	T_{STG}	–65	150	ºC
Ambient Temperature Under Bias	T_A	–40	125	ºC
Junction Temperature	T_J	—	150	°C
Supply Voltage	V_{DD1}, V_{DD2}	–0.5	7.0	V
Input Voltage	V_I	–0.5	V_{DD} + 0.5	V
Output Voltage	V_O	–0.5	V_{DD} + 0.5	V
Output Current Drive Channel (All devices unless otherwise stated)	I_O	—	10	mA
Output Current Drive Channel (All Si86xxxA-x-xx devices)	I_O	—	22	mA
Latchup Immunity[3]		—	100	V/ns
Lead Solder Temperature (10 s)		—	260	ºC
Maximum Isolation (Input to Output) (1 sec) NB SOIC-16, SOIC-8		—	4500	V_{RMS}
Maximum Isolation (Input to Output) (1 sec) WB SOIC-16		—	6500	V_{RMS}

Notes:

1. Permanent device damage may occur if the absolute maximum ratings are exceeded. Functional operation should be restricted to conditions as specified in the operational sections of this data sheet.
2. VDE certifies storage temperature from –40 to 150 °C.
3. Latchup immunity specification is for slew rate applied across GND1 and GND2.

5. Pin Descriptions

5.1 Pin Descriptions (Si861x/2x Narrow Body SOIC-8)

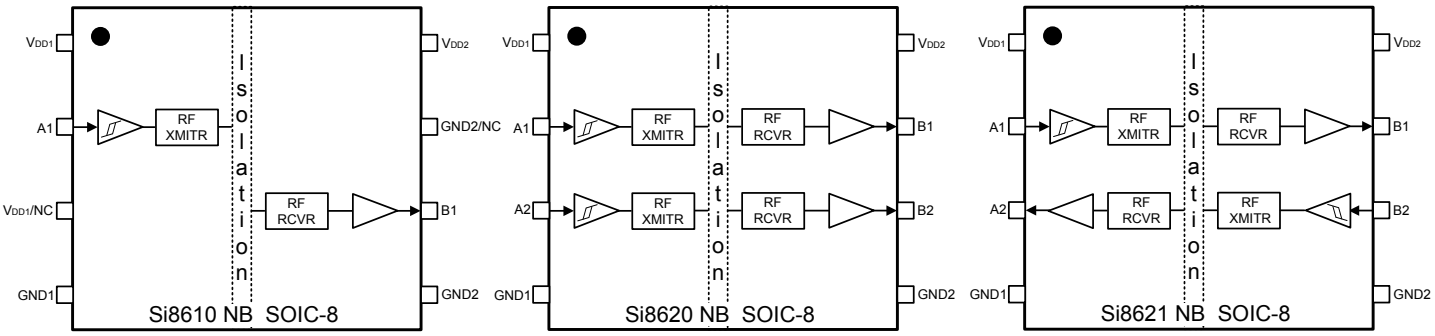

Figure 5.1. Si861x/2x Narrow Body SOIC-8 Pin Descriptions

Table 5.1. Si861x/2x Narrow Body SOIC-8 Pin Descriptions

Name	SOIC-8 Pin# Si861x	SOIC-8 Pin# Si862x	Type	Description
V_{DD1}/NC*	1,3	1	Supply	Side 1 power supply.
GND1	4	4	Ground	Side 1 ground.
A1	2	2	Digital I/O	Side 1 digital input or output.
A2	NA	3	Digital I/O	Side 1 digital input or output.
B1	6	7	Digital I/O	Side 2 digital input or output.
B2	NA	6	Digital I/O	Side 2 digital input or output.
V_{DD2}	8	8	Supply	Side 2 power supply.
GND2/NC*	5, 7	5	Ground	Side 2 ground.
Note: No connect. These pins are not internally connected. They can be left floating, tied to VDD, or tied to GND.				

5.2 Pin Descriptions (Si863x)

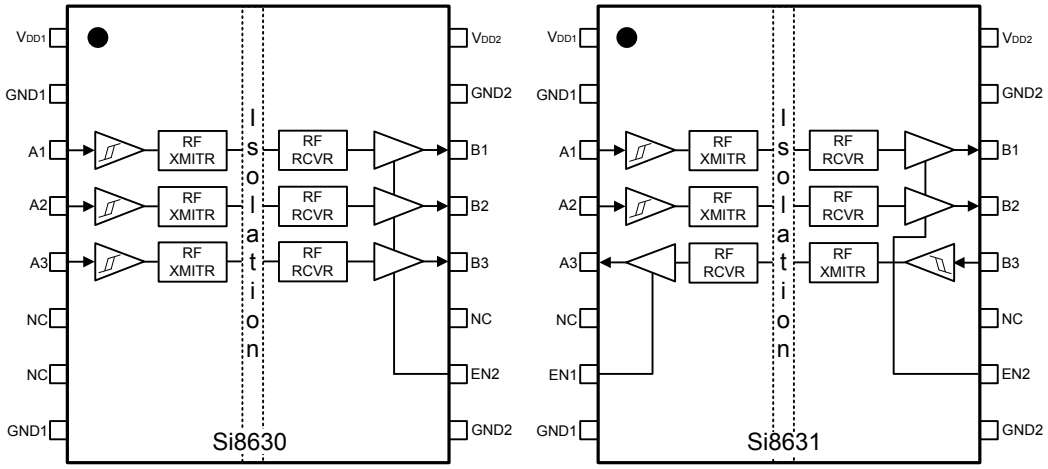

Figure 5.2. Si863x Pin Descriptions

Table 5.2. Si863x Pin Descriptions

Name	SOIC-16 Pin#	Type	Description
V_{DD1}	1	Supply	Side 1 power supply.
GND1	21	Ground	Side 1 ground.
A1	3	Digital Input	Side 1 digital input.
A2	4	Digital Input	Side 1 digital input.
A3	5	Digital I/O	Side 1 digital input or output.
NC	6	NA	No Connect.
EN1/NC2	7	Digital Input	Side 1 active high enable. NC on Si8630
GND1	81	Ground	Side 1 ground.
GND2	91	Ground	Side 2 ground.
EN2	10	Digital Input	Side 2 active high enable.
NC	11	NA	No Connect.
B3	12	Digital I/O	Side 2 digital input or output.
B2	13	Digital Output	Side 2 digital output.
B1	14	Digital Output	Side 2 digital output.
GND2	151	Ground	Side 2 ground.
V_{DD2}	16	Supply	Side 2 power supply.

Notes:

1. For narrow-body devices, Pin 2 and Pin 8 GND must be externally connected to respective ground. Pin 9 and Pin 15 must also be connected to external ground.
2. No Connect. These pins are not internally connected. They can be left floating, tied to V_{DD} or tied to GND.

5.3 Pin Descriptions (Si864x)

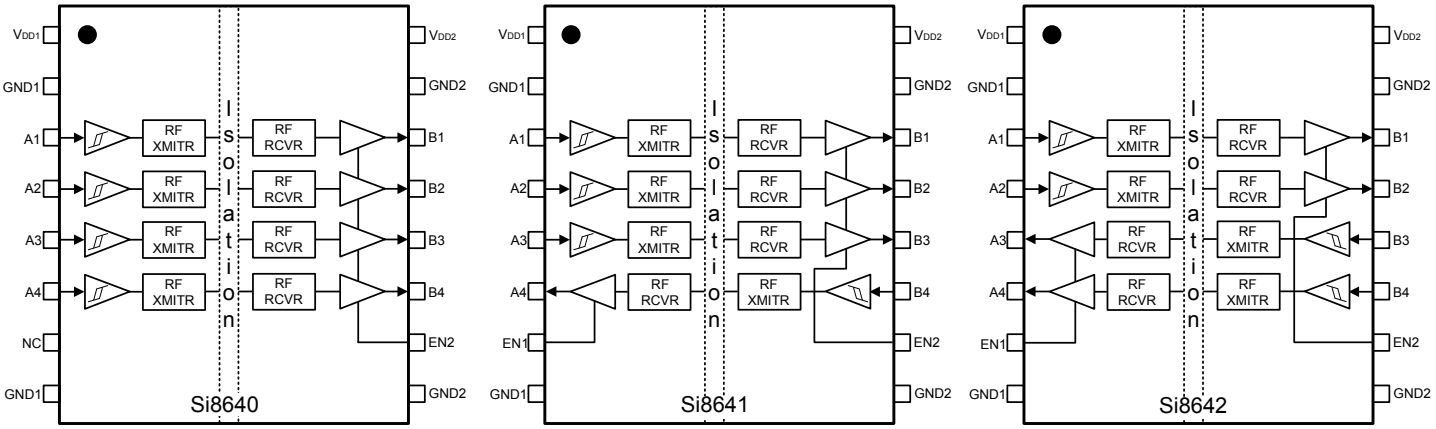

Figure 5.3. Si864x Pin Descriptions

Table 5.3. Si864x Pin Descriptions

Name	SOIC-16 Pin#	Type	Description
V_{DD1}	1	Supply	Side 1 power supply.
GND1	21	Ground	Side 1 ground.
A1	3	Digital Input	Side 1 digital input.
A2	4	Digital Input	Side 1 digital input.
A3	5	Digital I/O	Side 1 digital input or output.
A4	6	Digital I/O	Side 1 digital input or output.
EN1/NC2	7	Digital Input	Side 1 active high enable. NC on Si8640.
GND1	81	Ground	Side 1 ground.
GND2	91	Ground	Side 2 ground.
EN2	10	Digital Input	Side 2 active high enable.
B4	11	Digital I/O	Side 2 digital input or output.
B3	12	Digital I/O	Side 2 digital input or output.
B2	13	Digital Output	Side 2 digital output.
B1	14	Digital Output	Side 2 digital output.
GND2	151	Ground	Side 2 ground.
V_{DD2}	16	Supply	Side 2 power supply.

Notes:

1. For narrow-body devices, Pin 2 and Pin 8 GND must be externally connected to respective ground. Pin 9 and Pin 15 must also be connected to external ground.
2. No Connect. These pins are not internally connected. They can be left floating, tied to V_{DD} or tied to GND.

5.4 Pin Descriptions (Si8650/51/52)

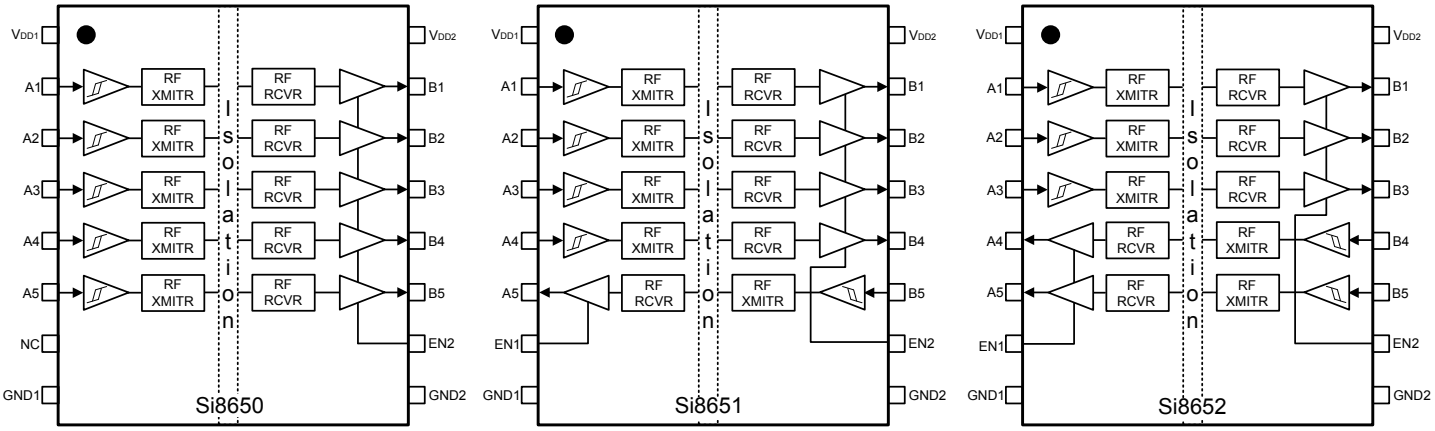

Figure 5.4. Si865x Pin Descriptions

Table 5.4. Si865x Pin Descriptions

Name	SOIC-16 Pin#	Type	Description
V_{DD1}	1	Supply	Side 1 power supply.
A1	2	Digital Input	Side 1 digital input.
A2	3	Digital Input	Side 1 digital input.
A3	4	Digital Input	Side 1 digital input.
A4	5	Digital I/O	Side 1 digital input or output.
A5	6	Digital I/O	Side 1 digital input or output.
EN1/NC*	7	Digital Input	Side 1 active high enable. NC on Si8650.
GND1	8	Ground	Side 1 ground.
GND2	9	Ground	Side 2 ground.
EN2	10	Digital Input	Side 2 active high enable.
B5	11	Digital I/O	Side 2 digital input or output.
B4	12	Digital I/O	Side 2 digital input or output.
B3	13	Digital Output	Side 2 digital output.
B2	14	Digital Output	Side 2 digital output.
B1	15	Digital Output	Side 2 digital output.
V_{DD2}	16	Supply	Side 2 power supply.
Note: No Connect. These pins are not internally connected. They can be left floating, tied to V_{DD} or tied to GND.			

5.5 Pin Descriptions (Si866x)

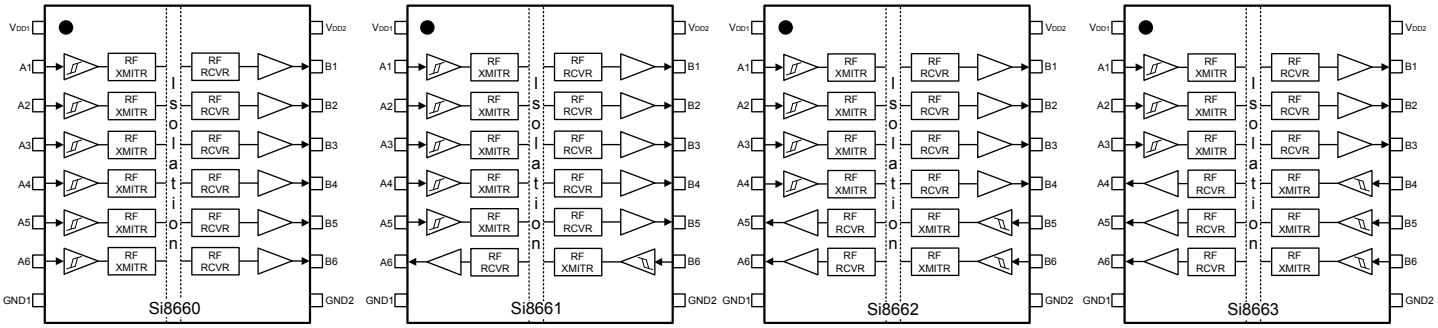

Figure 5.5. Si866x Pin Descriptions

Table 5.5. Si866x Pin Descriptions

Name	SOIC-16 Pin#	Type	Description
V_{DD1}	1	Supply	Side 1 power supply.
A1	2	Digital Input	Side 1 digital input.
A2	3	Digital Input	Side 1 digital input.
A3	4	Digital Input	Side 1 digital input.
A4	5	Digital I/O	Side 1 digital input or output.
A5	6	Digital I/O	Side 1 digital input or output.
A6	7	Digital I/O	Side 1 digital input or output.
GND1	8	Ground	Side 1 ground.
GND2	9	Ground	Side 2 ground.
B6	10	Digital I/O	Side 2 digital input or output.
B5	11	Digital I/O	Side 2 digital input or output.
B4	12	Digital I/O	Side 2 digital input or output.
B3	13	Digital Output	Side 2 digital output.
B2	14	Digital Output	Side 2 digital output.
B1	15	Digital Output	Side 2 digital output.
V_{DD2}	16	Supply	Side 2 power supply.

6. Package Outlines

6.1 Package Outline (16-Pin Wide Body SOIC)

The figure below illustrates the package details for the Si86xx Digital Isolator. The table below lists the values for the dimensions shown in the illustration.

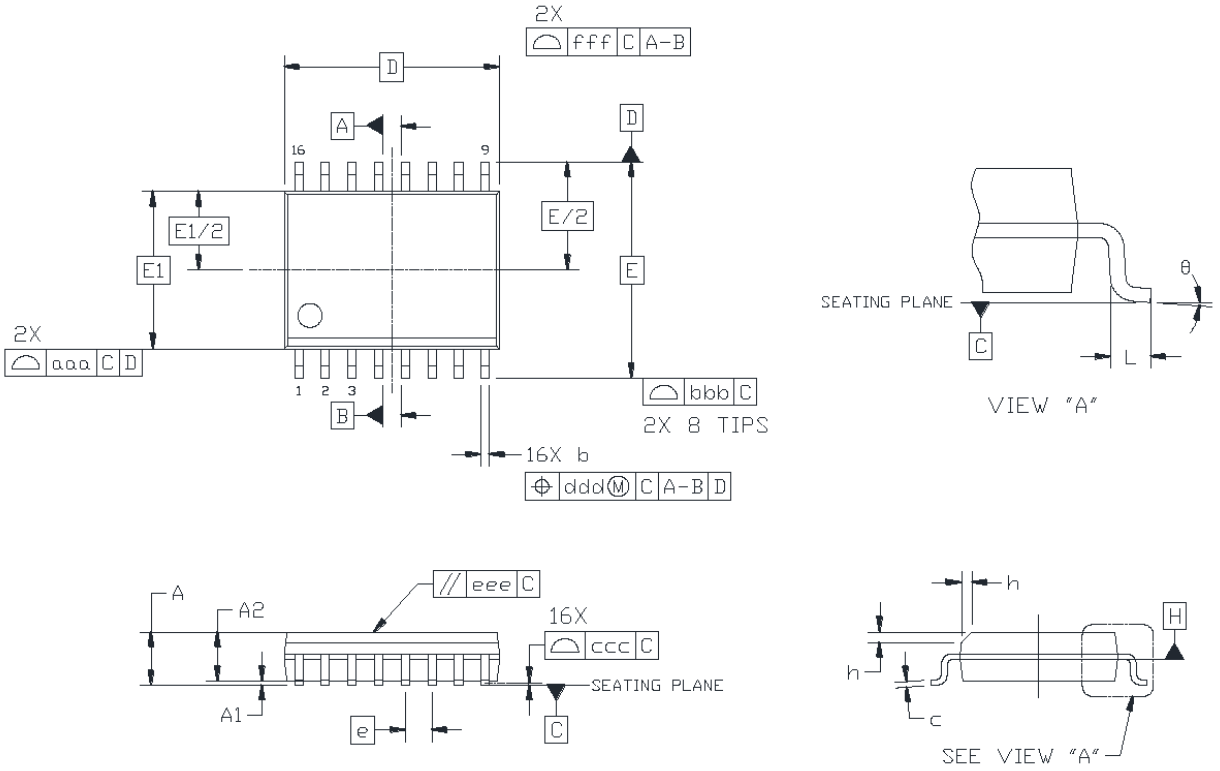

Figure 6.1. 16-Pin Wide Body SOIC

Table 6.1. Package Diagram Dimensions

Dimension	Min	Max
A	—	2.65
A1	0.10	0.30
A2	2.05	—
b	0.31	0.51
c	0.20	0.33
D	10.30 BSC	
E	10.30 BSC	
E1	7.50 BSC	
e	1.27 BSC	
L	0.40	1.27
h	0.25	0.75
θ	0°	8°
aaa	—	0.10
bbb	—	0.33
ccc	—	0.10
ddd	—	0.25
eee	—	0.10
fff	—	0.20

Notes:

1. All dimensions shown are in millimeters (mm) unless otherwise noted.
2. Dimensioning and Tolerancing per ANSI Y14.5M-1994.
3. This drawing conforms to JEDEC Outline MS-013, Variation AA.
4. Recommended reflow profile per JEDEC J-STD-020 specification for small body, lead-free components.

6.2 Package Outline (16-Pin Narrow Body SOIC)

The figure below illustrates the package details for the Si86xx in a 16-pin narrow-body SOIC (SO-16). The table below lists the values for the dimensions shown in the illustration.

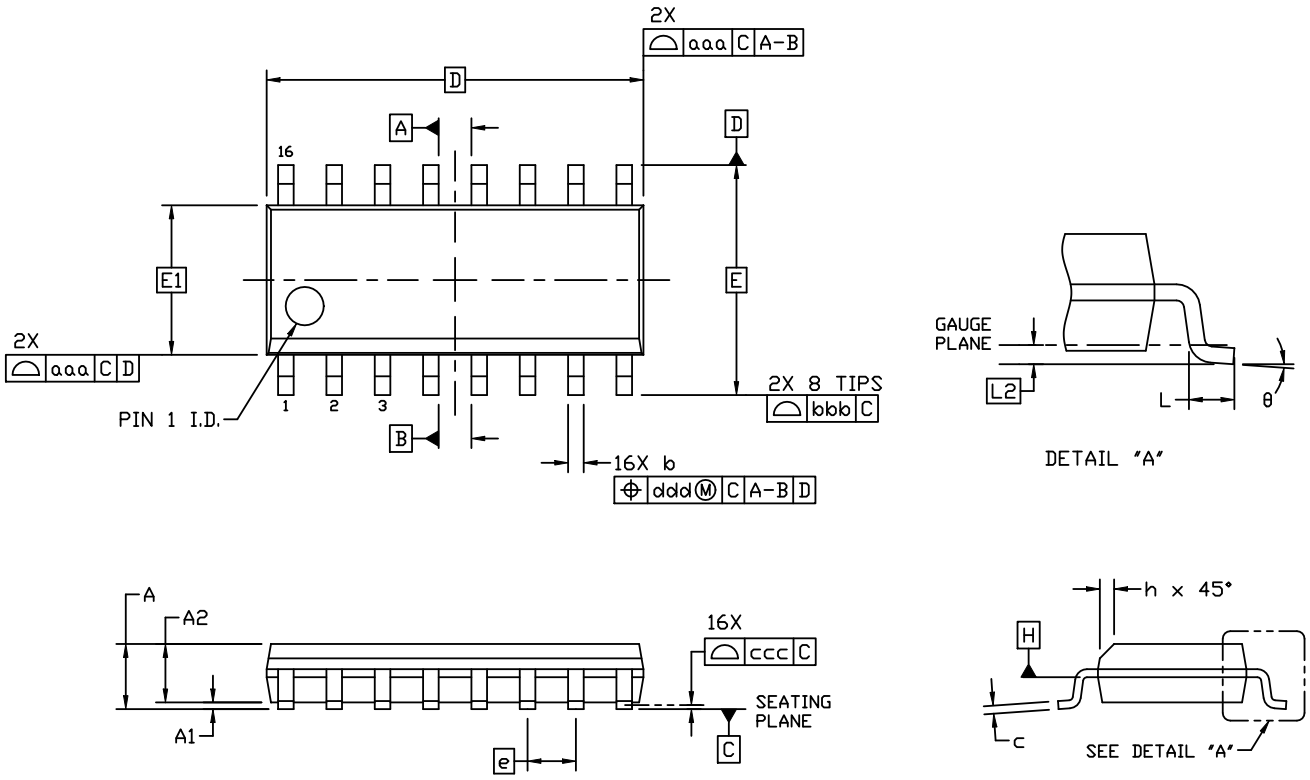

Figure 6.2. 16-pin Small Outline Integrated Circuit (SOIC) Package

Table 6.2. Package Diagram Dimensions

Dimension	Min	Max
A	—	1.75
A1	0.10	0.25
A2	1.25	—
b	0.31	0.51
c	0.17	0.25
D	9.90 BSC	
E	6.00 BSC	
E1	3.90 BSC	
e	1.27 BSC	
L	0.40	1.27
L2	0.25 BSC	
h	0.25	0.50
θ	0°	8°
aaa	0.10	
bbb	0.20	
ccc	0.10	
ddd	0.25	

Notes:

1. All dimensions shown are in millimeters (mm) unless otherwise noted.
2. Dimensioning and Tolerancing per ANSI Y14.5M-1994.
3. This drawing conforms to the JEDEC Solid State Outline MS-012, Variation AC.
4. Recommended card reflow profile is per the JEDEC/IPC J-STD-020 specification for Small Body Components.

6.3 Package Outline (8-Pin Narrow Body SOIC)

The figure below illustrates the package details for the Si86xx. The table below lists the values for the dimensions shown in the illustration.

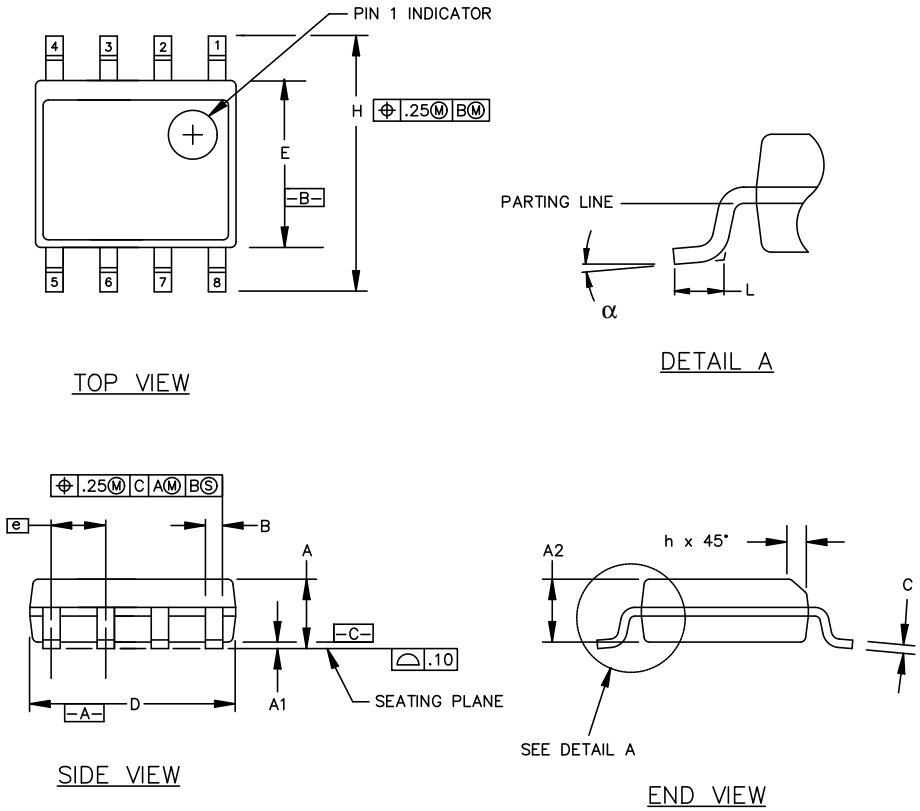

Figure 6.3. 8-pin Small Outline Integrated Circuit (SOIC) Package

Table 6.3. Package Diagram Dimensions

Symbol	Millimeters	
	Min	Max
A	1.35	1.75
A1	0.10	0.25
A2	1.40 REF	1.55 REF
B	0.33	0.51
C	0.19	0.25
D	4.80	5.00
E	3.80	4.00
e	1.27 BSC	
H	5.80	6.20
h	0.25	0.50
L	0.40	1.27
∝	0°	8°

7. Land Patterns

7.1 Land Pattern (16-Pin Wide-Body SOIC)

The figure below illustrates the recommended land pattern details for the Si86xx in a 16-pin wide-body SOIC. The table below lists the values for the dimensions shown in the illustration.

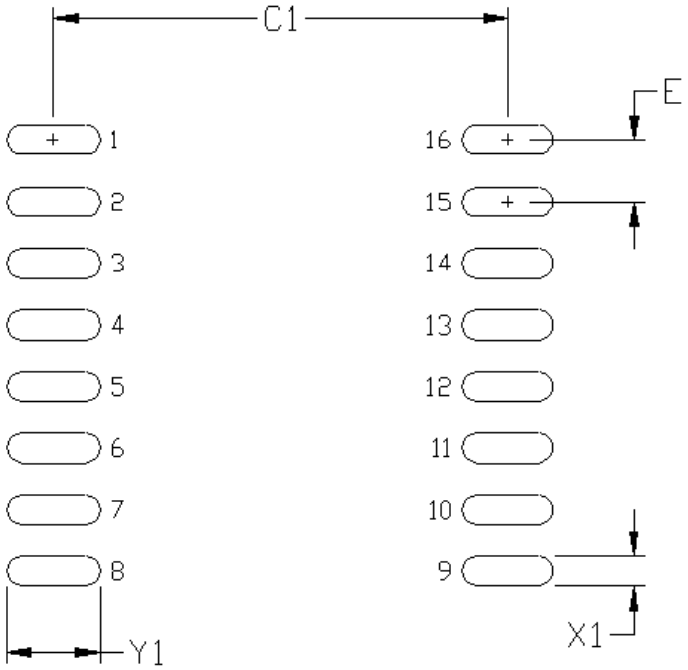

Figure 7.1. 16-Pin SOIC Land Pattern

Table 7.1. 16-Pin Wide Body SOIC Land Pattern Dimensions

Dimension	Feature	(mm)
C1	Pad Column Spacing	9.40
E	Pad Row Pitch	1.27
X1	Pad Width	0.60
Y1	Pad Length	1.90

Notes:

1. This Land Pattern Design is based on IPC-7351 pattern SOIC127P1032X265-16AN for Density Level B (Median Land Protrusion).
2. All feature sizes shown are at Maximum Material Condition (MMC) and a card fabrication tolerance of 0.05 mm is assumed.

7.2 Land Pattern (16-Pin Narrow Body SOIC)

The figure below illustrates the recommended land pattern details for the Si86xx in a 16-pin narrow-body SOIC. The table below lists the values for the dimensions shown in the illustration.

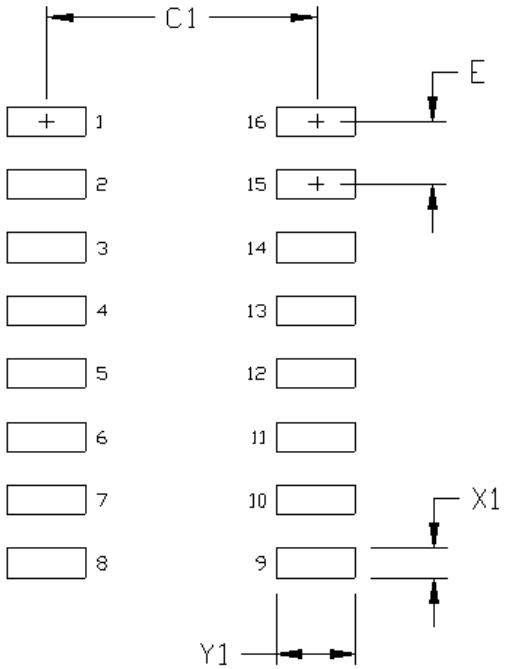

Figure 7.2. 16-Pin Narrow Body SOIC PCB Land Pattern

Table 7.2. 16-Pin Narrow Body SOIC Land Pattern Dimensions

Dimension	Feature	(mm)
C1	Pad Column Spacing	5.40
E	Pad Row Pitch	1.27
X1	Pad Width	0.60
Y1	Pad Length	1.55

Notes:

1. This Land Pattern Design is based on IPC-7351 pattern SOIC127P600X165-16N for Density Level B (Median Land Protrusion).
2. All feature sizes shown are at Maximum Material Condition (MMC) and a card fabrication tolerance of 0.05 mm is assumed.

7.3 Land Pattern (8-Pin Narrow Body SOIC)

The figure below illustrates the recommended land pattern details for the Si86xx in an 8-pin narrow-body SOIC. The table below lists the values for the dimensions shown in the illustration.

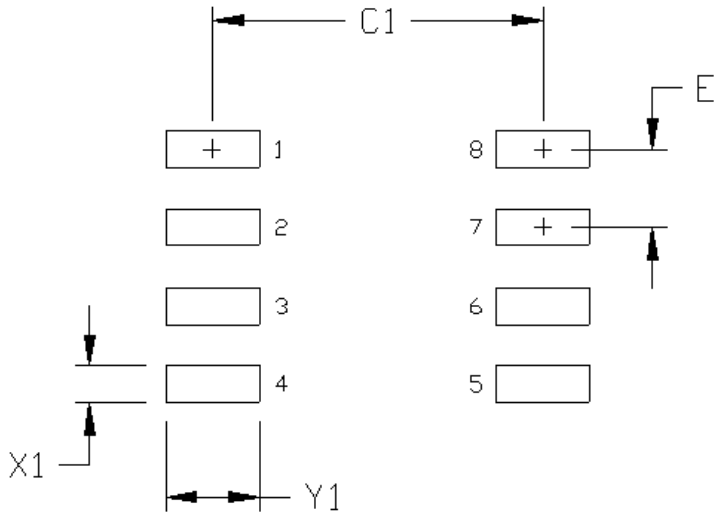

Figure 7.3. PCB Land Pattern: 8-Pin Narrow Body SOIC

Table 7.3. PCM Land Pattern Dimensions (8-Pin Narrow Body SOIC)

Dimension	Feature	(mm)
C1	Pad Column Spacing	5.40
E	Pad Row Pitch	1.27
X1	Pad Width	0.60
Y1	Pad Length	1.55

Notes:

1. This Land Pattern Design is based on IPC-7351 pattern SOIC127P600X173-8N for Density Level B (Median Land Protrusion).
2. All feature sizes shown are at Maximum Material Condition (MMC) and a card fabrication tolerance of 0.05 mm is assumed.

8. Top Markings

8.1 Top Marking (16-Pin Wide Body SOIC)

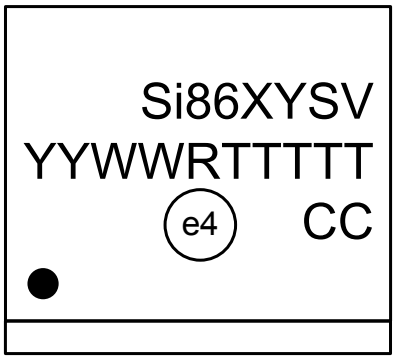

Figure 8.1. 16-Pin Wide Body SOIC

Table 8.1. Top Marking Explanation (16-Pin Wide Body SOIC)

Line 1 Marking:	Base Part Number Ordering Options (See 1. Ordering Guide for more information).	Si86 = Isolator product series XY = Channel Configuration
		X = # of data channels (5, 4, 3, 2, 1) Y = # of reverse channels (2, 1, 0)
		S = Speed Grade (max data rate) and operating mode:
		A = 1 Mbps (default output = low) B = 150 Mbps (default output = low) D = 1 Mbps (default output = high) E = 150 Mbps (default output = high)
		V = Insulation rating
		A = 1 kV; B = 2.5 kV; C = 3.75 kV; D = 5.0 kV
Line 2 Marking:	YY = Year WW = Workweek	Assigned by assembly subcontractor. Corresponds to the year and work week of the mold date.
	RTTTTT = Mfg Code	Manufacturing code from assembly house “R” indicates revision
Line 3 Marking:	Circle = 1.7 mm Diameter (Center-Justified)	“e4” Pb-free symbol
	Country of Origin ISO Code Abbreviation	CC = Country of Origin ISO Code Abbreviation • TW = Taiwan • TH = Thailand

8.2 Top Marking (16-Pin Narrow Body SOIC)

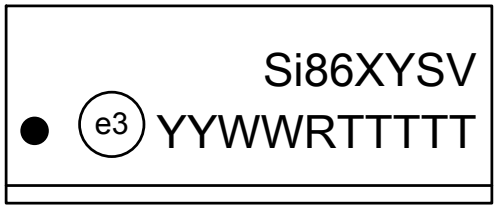

Figure 8.2. 16-Pin Narrow Body SOIC

Table 8.2. Top Marking Explanation (16-Pin Narrow Body SOIC)

Line 1 Marking:	Base Part Number Ordering Options (See 1. Ordering Guide for more information.)	Si86 = Isolator product series XY = Channel Configuration
		X = # of data channels (5, 4, 3, 2, 1) Y = # of reverse channels (2, 1, 0)
		S = Speed Grade (max data rate) and operating mode:
		A = 1 Mbps (default output = low) B = 150 Mbps (default output = low) D = 1 Mbps (default output = high) E = 150 Mbps (default output = high)
		V = Insulation rating
		A = 1 kV; B = 2.5 kV; C = 3.75 kV
Line 2 Marking:	Circle = 1.2 mm Diameter	“e3” Pb-Free Symbol
	YY = Year WW = Work Week	Assigned by the assembly subcontractor. Corresponds to the year and work week of the mold date.
	RTTTTT = Mfg Code	Manufacturing code from assembly house “R” indicates revision

8.3 Top Marking (8-Pin Narrow Body SOIC)

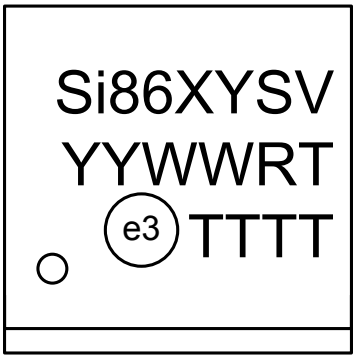

Figure 8.3. 8-Pin Narrow Body SOIC

Table 8.3. Top Marking Explanation (8-Pin Narrow Body SOIC)

Line 1 Marking:	Base Part Number Ordering Options (See 1. Ordering Guide for more information).	Si86 = Isolator Product Series XY = Channel Configuration S = Speed Grade (max data rate) V = Insulation rating
Line 2 Marking:	YY = Year WW = Workweek	Assigned by assembly subcontractor. Corresponds to the year and workweek of the mold date.
	R = Product Revision T = First character of the manufacturing code	
Line 3 Marking:	Circle = 1.1 mm Diameter	“e3” Pb-Free Symbol.
	TTTT = Last four characters of the manufacturing code	Last four characters of the manufacturing code.

9. Revision History

Revision 206851A

February, 2024

- Initial Agile PPAP release.

Revision 1.03

September 2019

- Updated Ordering Guide.

Revision 1.02

February 2018

- Added SI8641AB-AS1 and SI8642AB-AS1 to Ordering Guide for Automotive-Grade OPN options

Revision 1.01

January 2018

- Updated data sheet format.
- Added new table to Ordering Guide for Automotive-Grade OPN options
- Updated Table 4.5 Regulatory Information[1] on page 25.
  - Added CQC certificate numbers.
- Updated 1. Ordering Guide.
  - Removed references to moisture sensitivity levels.
  - Removed note 2.

Copyright © 2013–2024, Skyworks Solutions, Inc. All Rights Reserved.

Information in this document is provided in connection with Skyworks Solutions, Inc. ("Skyworks") products or services. These materials, including the infor-mation contained herein, are provided by Skyworks as a service to its customers and may be used for informational purposes only by the customer. Skyworks assumes no responsibility for errors or omissions in these materials or the information contained herein. Skyworks may change its documentation, products, services, specifications or product descriptions at any time, without notice. Skyworks makes no commitment to update the materials or information and shall have no responsibility whatsoever for conflicts, incompatibilities, or other difficulties arising from any future changes.

No license, whether express, implied, by estoppel or otherwise, is granted to any intellectual property rights by this document. Skyworks assumes no liability for any materials, products or information provided hereunder, including the sale, distribution, reproduction or use of Skyworks products, information or materials, except as may be provided in Skyworks' Terms and Conditions of Sale.

THE MATERIALS, PRODUCTS AND INFORMATION ARE PROVIDED "AS IS" WITHOUT WARRANTY OF ANY KIND, WHETHER EXPRESS, IMPLIED, STATUTORY, OR OTHERWISE, INCLUDING FITNESS FOR A PARTICULAR PURPOSE OR USE, MERCHANTABILITY, PERFORMANCE, QUALITY OR NON-INFRINGEMENT OF ANY INTELLECTUAL PROPERTY RIGHT; ALL SUCH WARRANTIES ARE HEREBY EXPRESSLY DISCLAIMED. SKYWORKS DOES NOT WARRANT THE ACCURACY OR COMPLETENESS OF THE INFORMATION, TEXT, GRAPHICS OR OTHER ITEMS CONTAINED WITHIN THESE MATERIALS. SKYWORKS SHALL NOT BE LIABLE FOR ANY DAMAGES, INCLUDING BUT NOT LIMITED TO ANY SPECIAL, INDIRECT, INCIDENTAL, STATUTORY, OR CONSEQUENTIAL DAMAGES, INCLUDING WITHOUT LIMITATION, LOST REVENUES OR LOST PROFITS THAT MAY RESULT FROM THE USE OF THE MATERIALS OR INFORMATION, WHETHER OR NOT THE RECIPIENT OF MATERIALS HAS BEEN ADVISED OF THE POSSIBILITY OF SUCH DAMAGE.

Skyworks products are not intended for use in medical, lifesaving or life-sustaining applications, or other equipment in which the failure of the Skyworks products could lead to personal injury, death, physical or environmental damage. Skyworks customers using or selling Skyworks products for use in such applications do so at their own risk and agree to fully indemnify Skyworks for any damages resulting from such improper use or sale.

Customers are responsible for their products and applications using Skyworks products, which may deviate from published specifications as a result of design defects, errors, or operation of products outside of published parameters or design specifications. Customers should include design and operating safeguards to minimize these and other risks. Skyworks assumes no liability for applications assistance, customer product design, or damage to any equipment resulting from the use of Skyworks products outside of Skyworks' published specifications or parameters.

Skyworks, the Skyworks symbol, Sky5®, SkyOne®, SkyBlue™, Skyworks Green™, ClockBuilder®, DSPLL®, ISOmodem®, ProSLIC®, SiPHY®, and RFeIC® are trademarks or registered trademarks of Skyworks Solutions, Inc. or its subsidiaries in the United States and other countries. Third-party brands and names are for identification purposes only and are the property of their respective owners. Additional information, including relevant terms and conditions, posted at www.skyworksinc.com, are incorporated by reference.