Throttle Position Sensor in Hall Effect Technology Hollow and D-Shaft Versions

FEATURES

- Accurate linearity down to: ± 0.5 %
- Easy mounting principle
- Non contacting technology: hall effect
- Model dedicated to all applications in harsh environments
- Spring loaded types available
- Material categorization: for definitions of compliance please see www.vishay.com/doc?99912

RoHS COMPLIANT

LINKS TO ADDITIONAL RESOURCES

3D Models

QUICK REFERENCE DATA

Sensor type	ROTATIONAL, single turn hall effect
Output type	Wires
Market appliance	Industrial
Dimensions	47 mm x 22 mm

ELECTRICAL SPECIFICATIONS

PARAMETER	STANDARD	SPECIAL
Electrical angle	90°, 120°, 180°, 270°, 360°	Any other angle upon request
Linearity	± 1 %	± 0.5 %
Supply voltage	5 V_{DC} ± 10 %	Other upon request
Supply current	10 mA typical / 16 mA max.	16 mA for PWM output
Output signal	Analog ratiometric 10 % to 90 % of V_{supply} or PWM 1 kHz, 10 % to 90 % duty cycle	Other upon request
Over voltage protection (input)	+28 V_{DC}	
Reverse voltage protection (input)	-14 V_{DC}	
Over voltage protection (output)	+28 V_{DC} (+38 V_{DC} peak - 1 h at +25 °C)	
Recommended load resistance	Min. 1 kΩ for analog output and PWM output	
Hysteresis static (D-shaft version)	< 0.3°	

MECHANICAL SPECIFICATIONS

PARAMETER	
Mechanical travel	360° continuous, stops upon request: 124° ± 3°
Bearing type	Sleeve bearing
Standard	IP 50; other on request
Weight	19 g ± 2 g hollow shaft model/22 g ± 2 g D-shaft model

ORDERING INFORMATION / DESCRIPTION

981HE	0	A	1	W	A	1F16	XXXX	BO 10	e1
MODEL	FEATURES	LINEARITY	ELECTRICAL ANGLE	OUTPUT TYPE	OUTPUT SIGNAL	SHAFT TYPE	SPECIAL REQUEST	PACKAGING	LEAD FINISH
	0: continuous rotation **1:** mechanical stops **2:** spring return CW **3:** spring return CCW For 1, 2, 3: max. electrical angle is: 120°	**A:** ± 1 % **B:** ± 0.5 %	**1:** 90° **2:** 180° **3:** 270° **4:** 360° **5:** 120° **9:** other angles	**W:** wires **Z:** custom	**A:** analog CW **B:** analog CCW **C:** PWM CW **D:** PWM CCW **Z:** other output	**1:** 6.35 mm **9:** special **P:** plain **F:** flatted **S:** slotted **Z:** other type		Box of 10 pieces	
					Shaft length from mounting face (standard: 16 mm) 8H00 hollow shaft 8H01 hollow D-shaft				

SAP PART NUMBERING GUIDELINES

981HE	1	B	9	Z	C	8H01	XXXX
MODEL	MECHANICAL FEATURES	LINEARITY	ELECTICAL ANGLE	OUTPUT TYPE	OUTPUT SIGNAL	SHAFT TYPE	SPECIAL REQUEST

For technical questions, contact: sferprecisionpot@vishay.com
THIS DOCUMENT IS SUBJECT TO CHANGE WITHOUT NOTICE. THE PRODUCTS DESCRIBED HEREIN AND THIS DOCUMENT ARE SUBJECT TO SPECIFIC DISCLAIMERS, SET FORTH AT www.vishay.com/doc?91000

V_{OUT} ANALOG

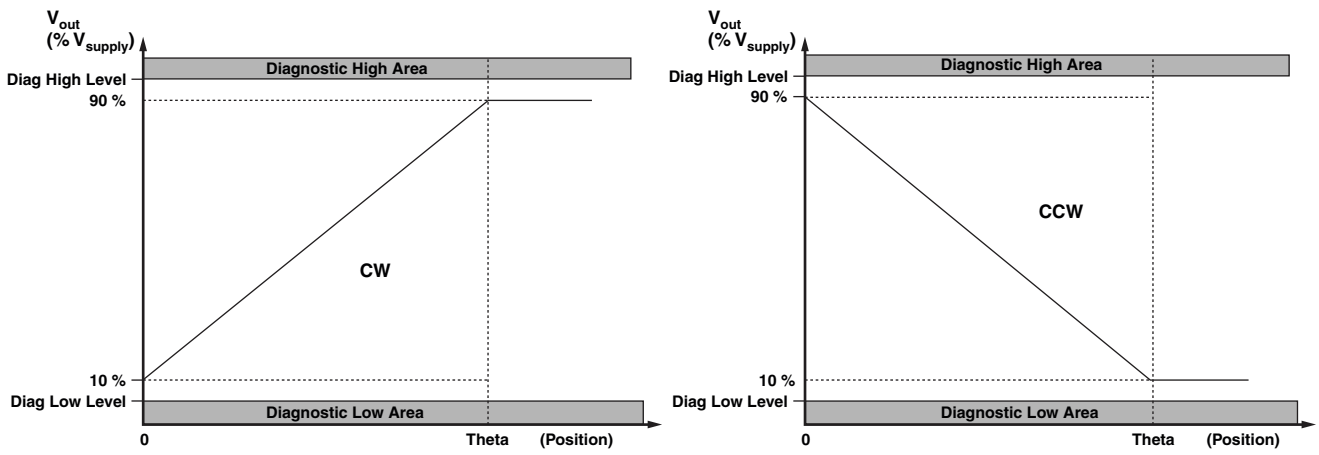

V_{OUT} PWM

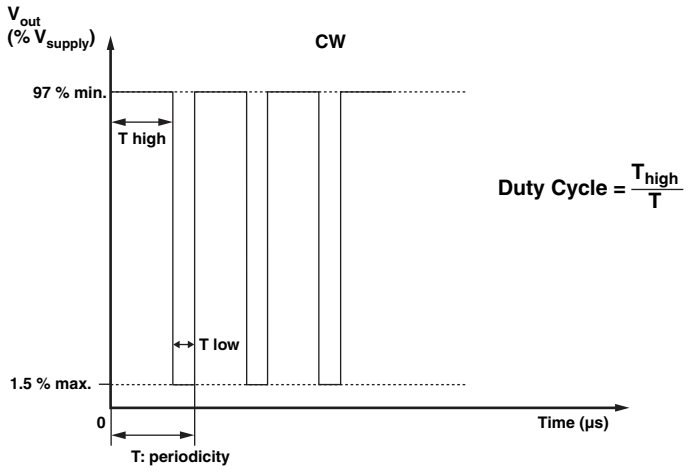

$$\text{Duty Cycle} = \frac{T_{high}}{T}$$

For technical questions, contact: sferprecisionpot@vishay.com
THIS DOCUMENT IS SUBJECT TO CHANGE WITHOUT NOTICE. THE PRODUCTS DESCRIBED HEREIN AND THIS DOCUMENT ARE SUBJECT TO SPECIFIC DISCLAIMERS, SET FORTH AT www.vishay.com/doc?91000

DIAGNOSTIC MODES			
FAILURE	**V_{out} ANALOG $R_{pull\text{-}up}$**	**V_{out} ANALOG $R_{pull\text{-}down}$**	**V_{out} PWM $R_{pull\text{-}up}$ = 1 kΩ $V_{pull\text{-}up}$ = V_{supply} = 5 V**
1: Broken GND	Diagnostic high area	Diagnostic low area	> 97 % V_{supply} without modulation
2: Broken V_{out}	Diagnostic high area	Diagnostic low area	> 97 % V_{supply} without modulation
3: Broken V_{supply}	Diagnostic high area	Diagnostic low area	> 97 % V_{supply} without modulation
Over voltage V_{supply} > 7 V	Diagnostic high area	Diagnostic low area	> 97 % V_{supply} without modulation
Under voltage V_{supply} < 2.7 V	Diagnostic high area	Diagnostic low area	> 97 % V_{supply} without modulation

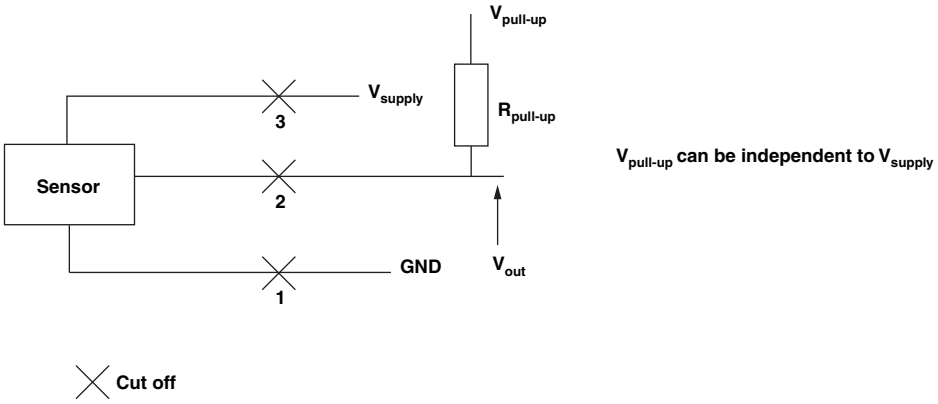

ENVIRONMENTAL SPECIFICATIONS	
Vibrations	20 *g* from 10 Hz to 2000 Hz, EN 60068-2-6
Shocks	3 shocks/axis; 50 *g* half a sine 11 ms, EN 60068-2-7
Operating temperature range	-45 °C to +125 °C
Life (in cycles)	> 5M for hollow shaft model / > 10M for D-shaft model
Rotational speed (max.)	120 rpm
Immunity to radiated electromagnetic disturbances	200 V/m 150 kHz/1 GHz, IEC 62132-2 part 2 (level A)
Immunity to power frequency magnetic field	200 A/m 50 Hz / 60 Hz, EN 61000-4-8 (level A)
Radiated electromagnetic emissions	30 MHz / 1 GHz < 30 dBµV/m, EN 61000-6-4 (level A)
Electrostatic discharges	Contact discharges: ± 8 kV Air discharges: ± 15 kV, EN 61000-4-2
MATERIALS	
Housing	Thermoplastic housing
Shaft	Stainless steel
Output	3 lead wires

Note

- Nothing stated herein shall be construed as a guarantee of quality or durability

For technical questions, contact: sferprecisionpot@vishay.com
THIS DOCUMENT IS SUBJECT TO CHANGE WITHOUT NOTICE. THE PRODUCTS DESCRIBED HEREIN AND THIS DOCUMENT ARE SUBJECT TO SPECIFIC DISCLAIMERS, SET FORTH AT www.vishay.com/doc?91000

DIMENSIONS in millimeters

VARIOUS POSSIBLE TYPES OF MODEL 981 HE IN D-SHAFT VERSION

① 981 HE D-Shaft
Spring return CCW
Shaft: Ø 6.35 flatted length 16 mm FMF

Model: 981HE-3-x-x-W-x-1F16

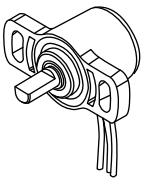

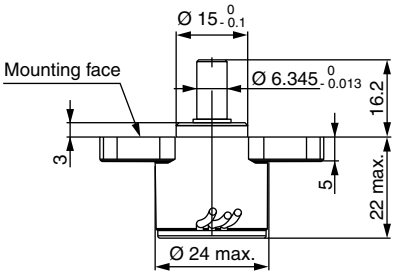

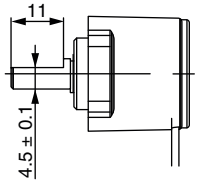

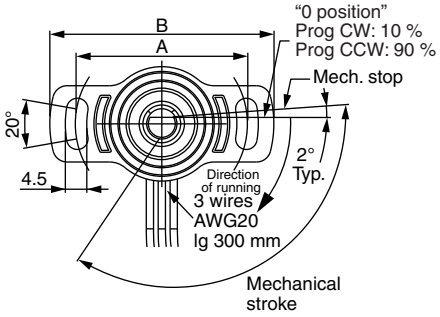

② 981 HE D-Shaft
Spring return CW
Shaft: Ø 6.35 flatted 16 mm FMF

Model: 981HE-2-x-x-W-x-1F16

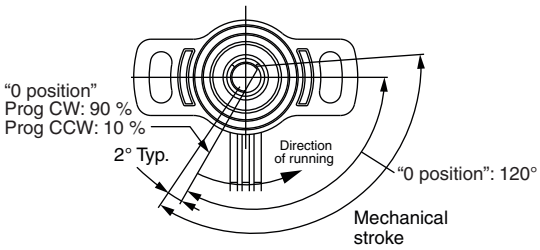

③ 981 HE D-Shaft
Continuous rotation
Shaft: Ø 6.35 flatted 16 mm FMF

Model: 981HE-0-x-x-W-x-1F16

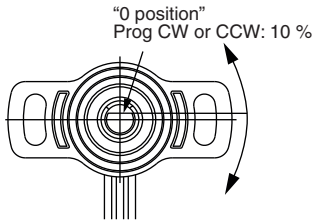

Dimension	Standard	Option	Wires	
A	36	38	Yellow	GND (-)
			Red	Signal
B	47	48	Green	V_{CC} (+)

For technical questions, contact: sferprecisionpot@vishay.com

THIS DOCUMENT IS SUBJECT TO CHANGE WITHOUT NOTICE. THE PRODUCTS DESCRIBED HEREIN AND THIS DOCUMENT ARE SUBJECT TO SPECIFIC DISCLAIMERS, SET FORTH AT www.vishay.com/doc?91000

DIMENSIONS in millimeters

VARIOUS POSSIBLE TYPES OF MODEL 981 HE IN HOLLOW SHAFT VERSION

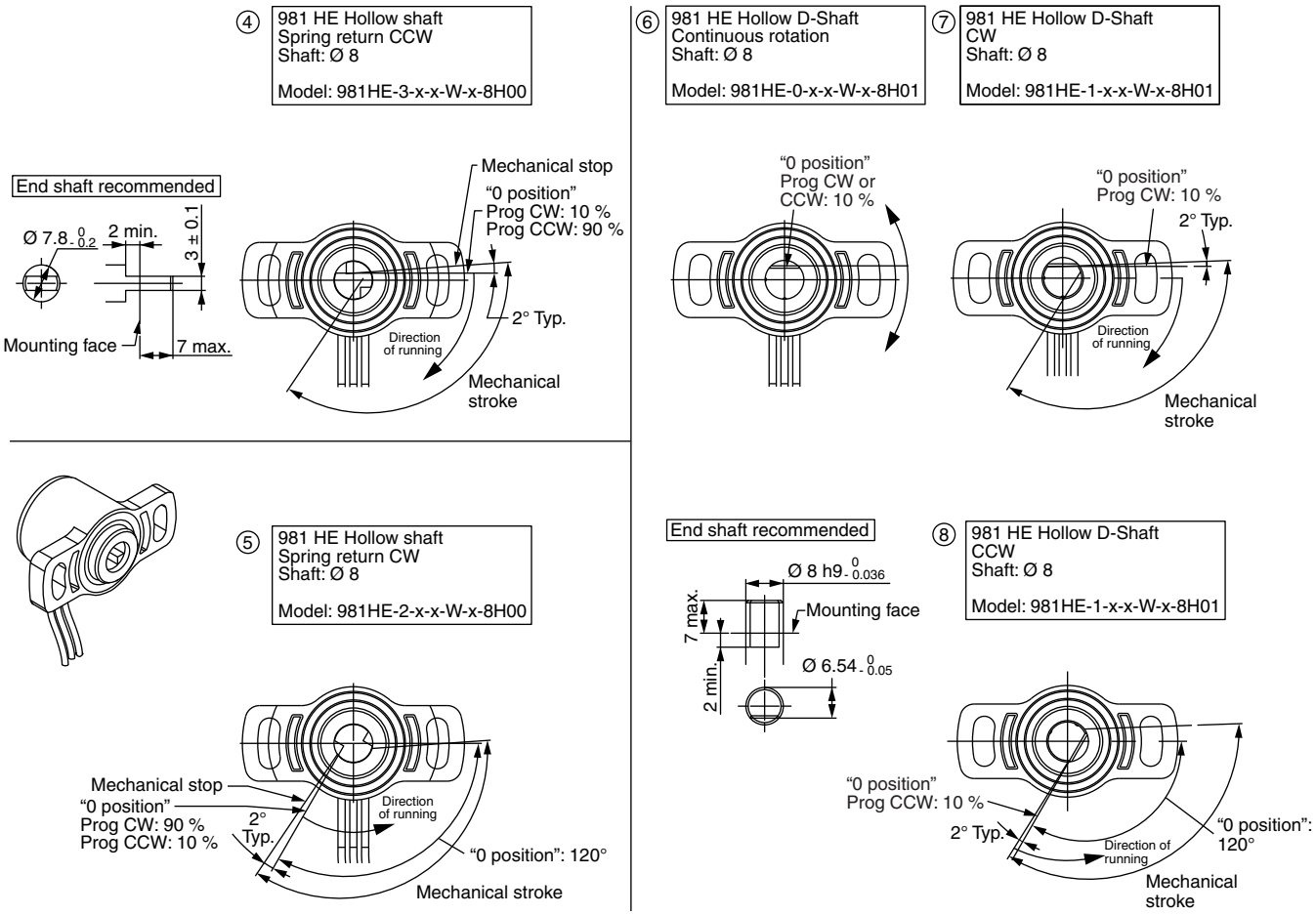

For technical questions, contact: sferprecisionpot@vishay.com

THIS DOCUMENT IS SUBJECT TO CHANGE WITHOUT NOTICE. THE PRODUCTS DESCRIBED HEREIN AND THIS DOCUMENT ARE SUBJECT TO SPECIFIC DISCLAIMERS, SET FORTH AT www.vishay.com/doc?91000

Disclaimer

ALL PRODUCT, PRODUCT SPECIFICATIONS AND DATA ARE SUBJECT TO CHANGE WITHOUT NOTICE TO IMPROVE RELIABILITY, FUNCTION OR DESIGN OR OTHERWISE.

Vishay Intertechnology, Inc., its affiliates, agents, and employees, and all persons acting on its or their behalf (collectively, “Vishay”), disclaim any and all liability for any errors, inaccuracies or incompleteness contained in any datasheet or in any other disclosure relating to any product.

Vishay makes no warranty, representation or guarantee regarding the suitability of the products for any particular purpose or the continuing production of any product. To the maximum extent permitted by applicable law, Vishay disclaims (i) any and all liability arising out of the application or use of any product, (ii) any and all liability, including without limitation special, consequential or incidental damages, and (iii) any and all implied warranties, including warranties of fitness for particular purpose, non-infringement and merchantability.

Statements regarding the suitability of products for certain types of applications are based on Vishay's knowledge of typical requirements that are often placed on Vishay products in generic applications. Such statements are not binding statements about the suitability of products for a particular application. It is the customer's responsibility to validate that a particular product with the properties described in the product specification is suitable for use in a particular application. Parameters provided in datasheets and / or specifications may vary in different applications and performance may vary over time. All operating parameters, including typical parameters, must be validated for each customer application by the customer's technical experts. Product specifications do not expand or otherwise modify Vishay's terms and conditions of purchase, including but not limited to the warranty expressed therein.

Hyperlinks included in this datasheet may direct users to third-party websites. These links are provided as a convenience and for informational purposes only. Inclusion of these hyperlinks does not constitute an endorsement or an approval by Vishay of any of the products, services or opinions of the corporation, organization or individual associated with the third-party website. Vishay disclaims any and all liability and bears no responsibility for the accuracy, legality or content of the third-party website or for that of subsequent links.

Vishay products are not designed for use in life-saving or life-sustaining applications or any application in which the failure of the Vishay product could result in personal injury or death unless specifically qualified in writing by Vishay. Customers using or selling Vishay products not expressly indicated for use in such applications do so at their own risk. Please contact authorized Vishay personnel to obtain written terms and conditions regarding products designed for such applications.

No license, express or implied, by estoppel or otherwise, to any intellectual property rights is granted by this document or by any conduct of Vishay. Product names and markings noted herein may be trademarks of their respective owners.

© 2025 VISHAY INTERTECHNOLOGY, INC. ALL RIGHTS RESERVED

THIS DOCUMENT IS SUBJECT TO CHANGE WITHOUT NOTICE. THE PRODUCTS DESCRIBED HEREIN AND THIS DOCUMENT ARE SUBJECT TO SPECIFIC DISCLAIMERS, SET FORTH AT www.vishay.com/doc?91000