7000 Series
Miniature Toggle Switches

Description

With a wide variety of actuator and termination options available, the 7000 series miniature toggle switches from C&K, which now includes an optional knurled cap on the locking lever options, are used by designers throughout the medical equipment and telecommunications industry to give product designs the long-lasting, high performance switch they need to succeed. The 7000 series are epoxy terminal-seal compatible with bottom wash cleaning and are engineered to be both multi-pole and multi-position, ensuring a perfect fit, no matter the design specifications.

Features & Benefits

- Multi-pole and multi-position
- Epoxy terminal-seal compatible with bottom wash cleaning
- RoHS compliant models available
- Wide variety of actuator and termination options

Applications

- Telecommunications
- Instrumentation
- Medical equipment

Agency Approvals

Agency	Agency File Number
c UL us	E42363

Specifications

Contact Rating	B contact material: 0.4 VA max. @ 20 V AC or DC max. Q contact material: 5 amps @ 120 V AC or 28 V DC; 2 amps @ 250 V AC. See page 17 for additional ratings.
Electrical Life	7X01 and UX1 models: 100,000 make-and-break cycles at full load. All other models: 40,000 cycles.
Contact Resistance	Below 10 m Ω typ. Initial @ 2-4 V DC, 100 mA, for both silver and gold plated contacts.
Insulation Resistance	10^9 Ω min.
Dielectric Strength	1000 Vrms min. @ sea level
Operating Temperature	-30°C to 85°C
Solderability	Per MIL-STD-202G method 208H, or EIA RS-186E method 9 (1 hour steam aging).

Notes:
Any models supplied with S, R, Q, B or G contact material are RoHS compliant and compatible. Specifications listed above are for switches with standard options. For information on specific and custom switches, consult Customer Service Center.

Materials

Case	Glass filled nylon 6/6, flame retardant, heat stabilized, ordiallyl phthalate (DAP) (UL 94 V-0).
Actuator	Brass, chrome plated
Bushing	Brass or zinc, nickel plated.
Housing	Stainless steel
Switch Support	Brass or steel, tin plated.
End Contacts	B contact material: Copper alloy, with gold plate over nickel plate. Q contact material: Coin silver, silver plated. See page 17 for additional contact materials.
Center Contacts & All Terminals	B contact material: Copper alloy, with gold plate over nickel plate. Q contact material: Copper alloy, silver plated. See above for additional contact materials.
Terminal Seal	Epoxy
Hardware	Nut & Locking Ring: Brass, nickel plated. Lockwasher: Steel, nickel plated.

© 2025 Littelfuse, Inc.
Specifications are subject to change without notice.
Revised: VL 06/18/25

7000 Series
Miniature Toggle Switches

Ordering Number

To order, simply select desired option from each category and place in the appropriate box. **For additional options not shown in catalog, consult Customer Service Center.** All models have epoxy terminal seal and are compatible with all "bottom-wash" PCB cleaning methods.

7xxx - xxx - xx - xxx - x - x - x - x

Switch Function
7101: SP On-None-On
7103: SP On-Off-On
7105: SP Mom.-Off-Mom.
7107: SP On-Off-Mom.
7108: SP On-None-Mom.
7201: DP On-None-On
7203: DP On-Off-On
7205: DP Mom.-Off-Mom.
7207: DP On-Off-Mom.
7211: DP On-On-On
7301: 3P On-None-On
7303: 3P On-Off-On
7401: 4P On-None-On

Actuator
M: 0.200" high
P3: Flatted, anti-rotation, 0.450" high
S: 0.420" high
T: 0.687" high, 15/32 bushing
K2[1]: Locking lever, 0.704" high
K12[1]: Locking lever, 0.732" high
L40: Lever handle without cap
L42: 0.838" high lever handle with cap
P4: Flatted, anti-rotation, 0.250" high
SP: Anti-rotation, 0.420" high
T1: 0.487" high, 15/32 bushing
TP: Anti-rotation, 0.687" high, 15/32 bushing

Bushing
D: 0.280 high, keyway
H: 0.296 high, flat
Y: 0.350 high, keyway
NONE: No bushing choice required
CW: Splashproof
D9: 0.280" high, keyway
Y9: 0.350" high, keyway

Contact Material
B: Gold
Q: Silver
S: Silver, matte-pin
G: Gold over silver
R: Gold over silver, matte-pin

Terminations
A: Right angle, PC thru-hole
AV2: Vert. right angle, PC thru-hole
C: PC Thru-hole
V3: 0.460 high, V-bracket
Z: Solder lug
V7: 0.630" high, V-bracket
V81: 0.953" high, snap-in V-bracket
W3: 0.425" long, wire wrap

Seal
E: Epoxy
I: Epoxy potted base

Actuator Color/Finish
None: Bright chrome
2: Black
3: Red

KXX Actuator Color/Finish
None: Natural aluminum
2: Black anodized aluminum
3: Red anodized aluminum
7: Blue anodized aluminum
G: Grip tip aluminum

Bushing Finish
NONE: Nickel on all bushings
2: Black

Notes:
1. K2/K12 actuators not available with switch function 7X05.

© 2025 Littelfuse, Inc.
Specifications are subject to change without notice.
Revised: VL 06/18/25

7000 Series
Miniature Toggle Switches

Switch Function

No. Poles	Model No.	UL[2] Model No.	Switch Function POS. 1	Switch Function POS. 2	Switch Function POS. 3	Connected Terminals POS. 1	Connected Terminals POS. 2	Connected Terminals POS. 3	Schematic
SP	7101	U11	ON	NONE	ON	2-3	N/A	2-1	SPDT 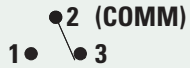
	7103	U13	ON	OFF	ON		OPEN		
	7105	U15	MOM.	OFF	MOM.		OPEN		
	7107	U17	ON	OFF	MOM.		OPEN		
	7108	U18	ON	NONE	MOM.		N/A		
DP	7201	U21	ON	NONE	ON	2-3, 5-6	N/A	2-1,5-4	DPDT
	7203	U23	ON	OFF	ON		OPEN		
	7205	U25	MOM.	OFF	MOM.		OPEN		
	7207	U27	ON	OFF	MOM.		OPEN		
	7211[1]	U211[1]	ON	ON	ON		2-3, 5-4		
3P	7301	U31	ON	NONE	ON	2-3, 5-6, 8-9	N/A	2-1,5-4, 8-7	3PDT 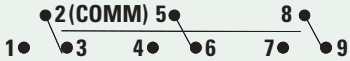
	7303	U33	ON	OFF	ON		OPEN		
	7307	U37	ON	OFF	MOM.		OPEN		
4P	7401	U41	ON	NONE	ON	2-3, 5-6, 8-9,11-12	N/A	2-1,5-4, 8-7,11-10	4PDT 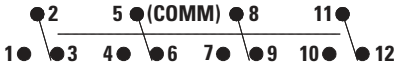

Notes:
1. Wiring for 3 way switch.
2. U11-U415 model nos. c UL us With all options when ordered with G, R, Q or S contact material.

© 2025 Littelfuse, Inc.
Specifications are subject to change without notice.
Revised: VL 06/18/25

7000 Series
Miniature Toggle Switches

SPDT

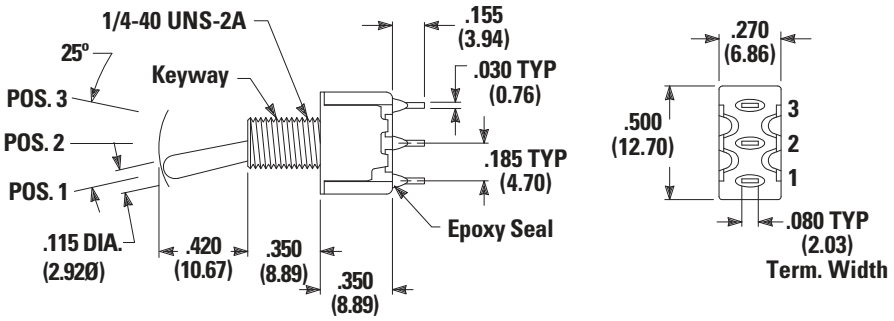

Note: Part Number shown: 7101SYZQE
Terminal Numbers for Reference Only

DPDT

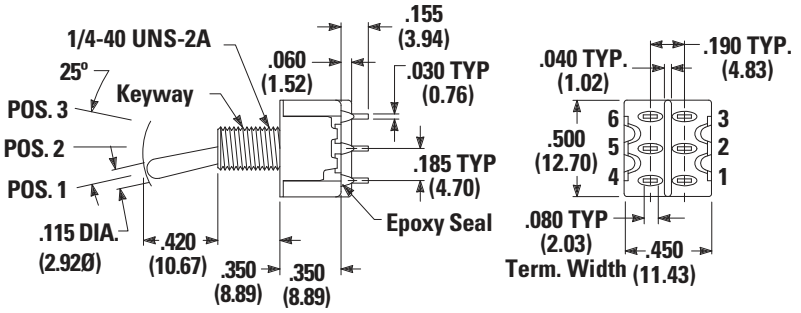

Note: Part Number shown: 7201SYZQE
Terminal Numbers for Reference Only

3PDT

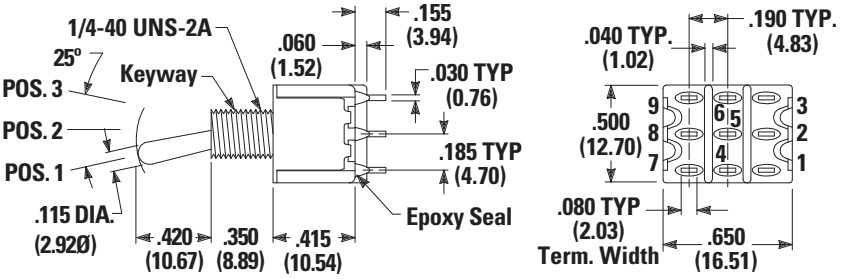

Note: Part Number shown: 7301SYZQE
Terminal Numbers for Reference Only

© 2025 Littelfuse, Inc.
Specifications are subject to change without notice.
Revised: VL 06/18/25

7000 Series
Miniature Toggle Switches

4PDT

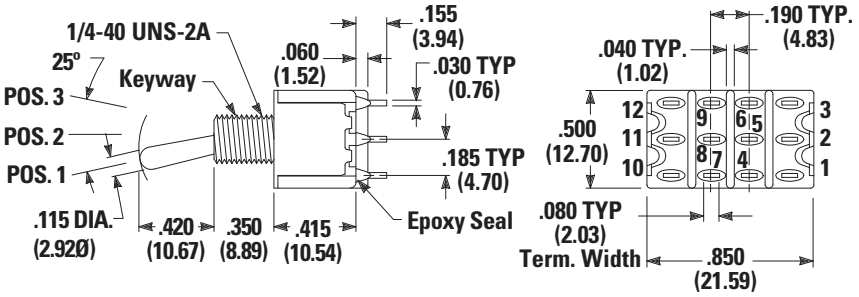

Note: Part Number shown: 7401SYZQE
Terminal Numbers for Reference Only

Actuator

S 0.4206" High [1,2]
SP Antirotation 0.4206"

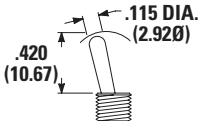

S actuator standard when ordered with W3 & Z terminations. Caps are available separately, see page 17.

M 0.2006" High [1,2]

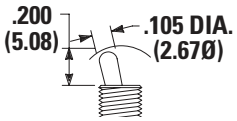

M actuator standard when ordered with all terminations except W3 & Z Caps are available separately, see page 17.

P3 Flatted with Antirotation, 0.4506" High[1]

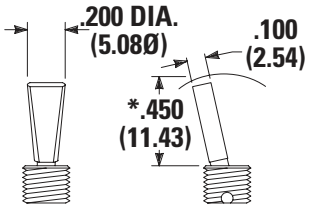

P4 Flatted with Antirotation, 0.2506" High[1]

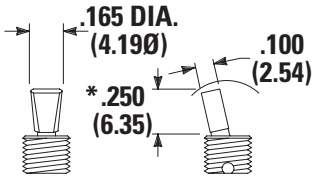

Notes:
1. Dress nut part number 709901201 supplied standard with threaded bushing. (Part number 709903201 with metric threaded bushings.)
2. S and M actuators not available with Y1 bushing.

© 2025 Littelfuse, Inc.
Specifications are subject to change without notice.
Revised: VL 06/18/25

7000 Series
Miniature Toggle Switches

Actuator

T 0.687 (17.45) 6 High
TP Antirotation, 0.687 (17.45) High, 15/32 Bushing

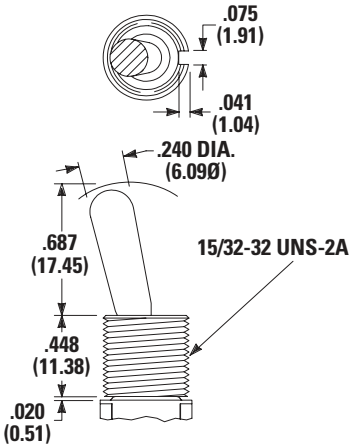

T1 0.487 (12.37) 6 High

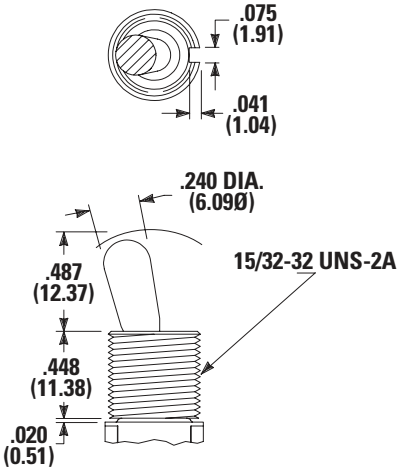

Notes:
Bushing option code not required unless CW splashproof bushing ordered. TP actuator not available with CW splashproof bushing. All TXX actuators not available on single pole models with A termination. All TXX actuators not available with Y1 bushing.

Notes:
1. Dress nut part number 709901201 supplied standard with threaded bushing. (Part number 709903201 with metric threaded bushings.)
2. S and M actuators not available with Y1 bushing.

© 2025 Littelfuse, Inc.
Specifications are subject to change without notice.
Revised: VL 06/18/25

7000 Series
Miniature Toggle Switches

Actuator

K2 Locking Lever, 0.704" High (threaded)

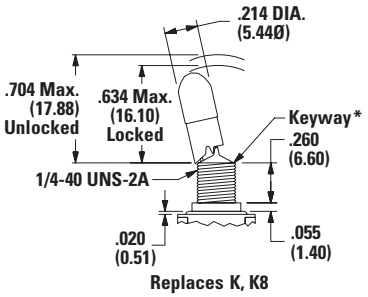

Replaces K, K8

K12 Locking Lever, 0.732" High (threaded)

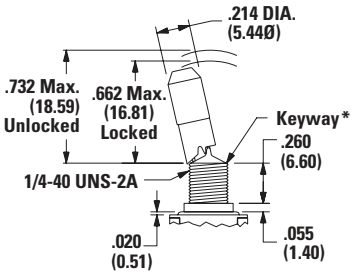

Replaces K1, K18

Locking Positions

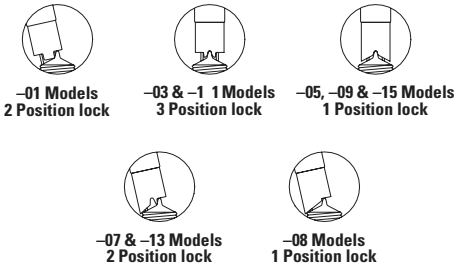

KXX Actuator Color/Finish

Option Code	Actuator Cap Finish
None	Natural Aluminum-With Nickle Plated Bushing
2	Black Anodized Aluminum
3	Red Anodized Aluminum
7	Blue Anodized Aluminum
G	Grip Tip Aluminum

Notes:
All KXX models including KXXCW have a keyway. To prevent accidental actuation, toggle must be lifted before being actuated. When released, toggle will lock in place. Overtightening mounting nut may cause actuator to bind. Locking levers supplied with bushing shown. Bushing option code not required unless CW splashproof bushing ordered. K2/K12 actuators not available with switch function 7X05

L40 Lever Handle without Cap

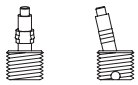

No color choice required.

Non-KXX Actuator Color/Finish

Option Code	Actuator Colors/Finish
None	Bright Chrome
2	Black
3	Red

Notes:
Lever handle for L42 actuator supplied, but not installed. For interchangeability, order L40 actuator option and lever handles separately, see page 18.

L42 Plastic Lever Handle with Antirotation and Cap, P/N 4811

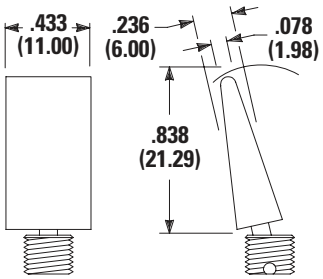

© 2025 Littelfuse, Inc.
Specifications are subject to change without notice.
Revised: VL 06/18/25

Bushing

Y 0.350" High Threaded, Keyway
Y9 0.350" High Unthreaded Keyway

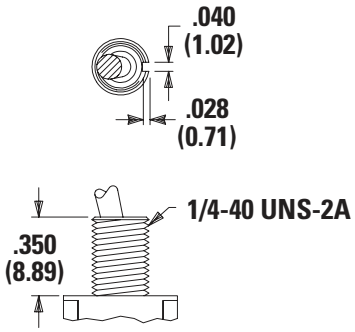

Note:
Y bushing standard with C or Z terminations.

D 0.280" High Threaded, Keyway
D9 0.280" High, Unthreaded, Keyway

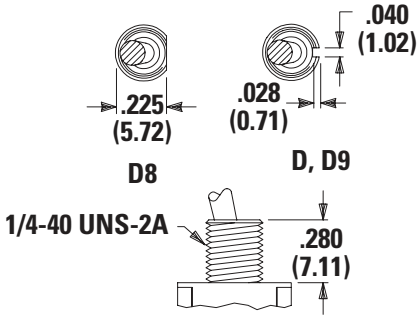

Notes:
D9 bushing standard with all terminations except C or Z.
Add 0.070 (1.78) to all actuator lengths with D and D9 bushings.

CW Threaded, Splashproof[1]

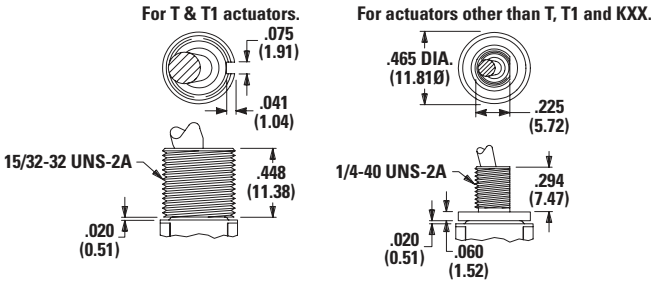

Notes:
For T & T1 actuators: IP67 Degree of protection, totally protected against dust, full-scale voltage protection, temporary immersion. Internal actuator seal standard. External bushing seal available separately from APM Hex seal, part # MFS-60064.

For actuators other than T, T1 and KXX: IP67 Degree of protection, totally protected against dust, full-scale voltage protection,temporary immersion. Internal actuator seal and external bushing seal washer standard.IP65 degree of protection for P4 or SP with CW option.

None No Bushing

No bushing choice required with KXX, TXX actuators. (exception: Specify CW if splashproof bushing desired).

H 0.296" High, Flat Threaded, High Torque [1]

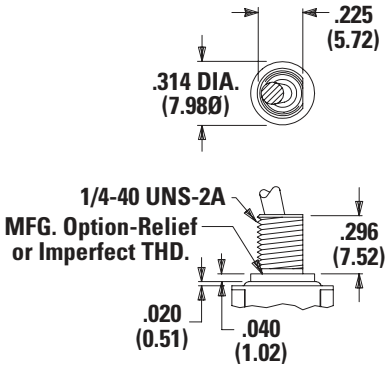

Option Code	Bushing Finish
None	Nickel on all bushings
2	Black

Notes:
Two mounting nuts, locking ring and lockwasher supplied standard with threaded bushings. Black hardware is supplied when either black bushings or actuators are specified. Optional mounting nut and locking ring styles and finishes available.
1. Will withstand 12 in.-lbs. of torque with no distortion.

© 2025 Littelfuse, Inc.
Specifications are subject to change without notice.
Revised: VL 06/18/25

7000 Series
Miniature Toggle Switches

Panel Mounting

1/4 INCH BUSHING

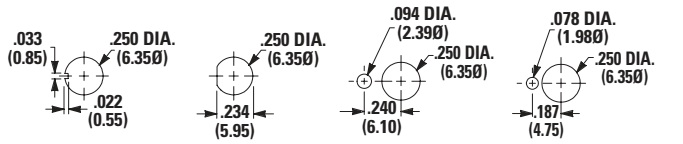

Without locking ring. | With standard locking ring. | With small locking ring.

15/32 INCH BUSHING

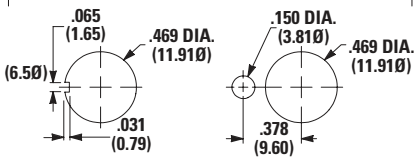

Without locking ring. | With standard locking ring.

Terminations

Z Solder Lug
SPDT thru 4PDT

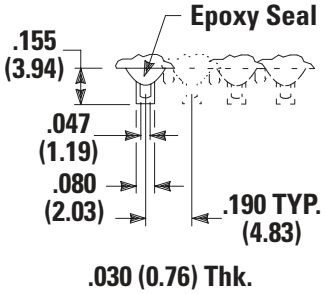

Note: Not available with R or S contact materials.

C PC Thru-hole
SPDT thru 4PDT

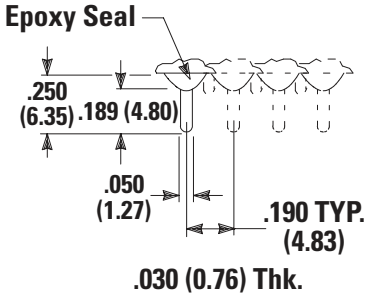

W3 Wire Wrap
SPDT thru 4PDT

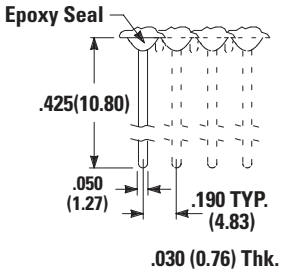

PC Mounting

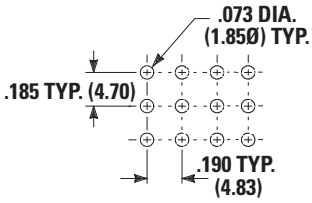

© 2025 Littelfuse, Inc.
Specifications are subject to change without notice.
Revised: VL 06/18/25

7000 Series
Miniature Toggle Switches

Terminations
A Right Angle, PC Thru-hole
7101MHABE

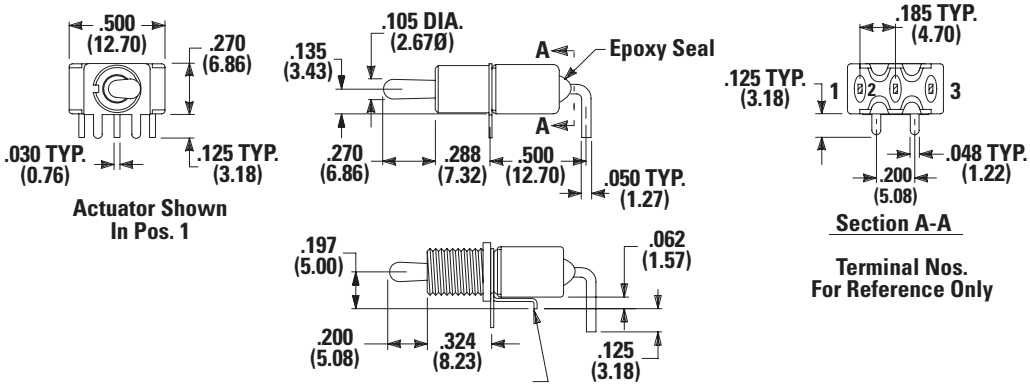

Note: Switch support with CW, H bushings and KXX actuators

PC Mounting

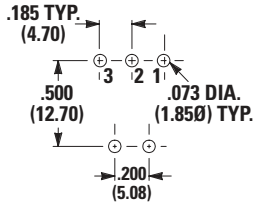

A Right Angle, PC Thru-hole
7201MD9ABE

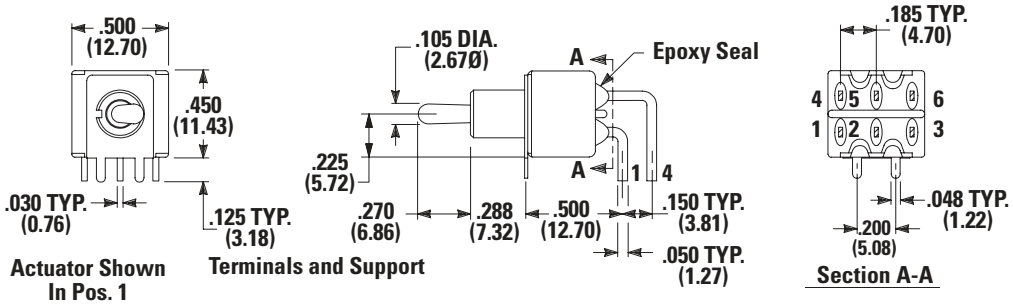

PC Mounting

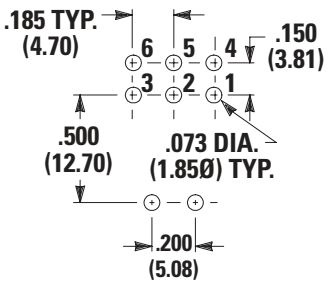

© 2025 Littelfuse, Inc.
Specifications are subject to change without notice.
Revised: VL 06/18/25

Terminations
A Right Angle, PC Thru-hole
7301MD9ABE

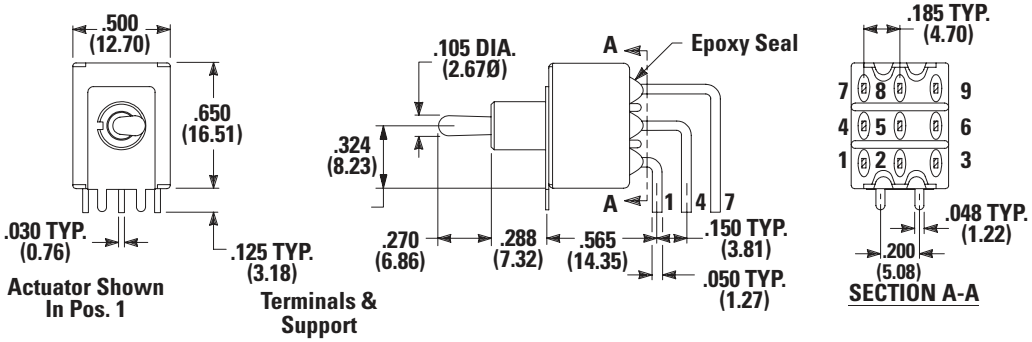

PC Mounting

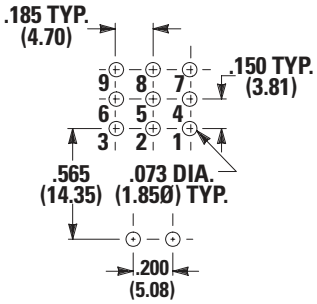

AV2 Vertical Right Angle, PC Thru-hole, 0.150" Pitch
7101MD9AV2BE

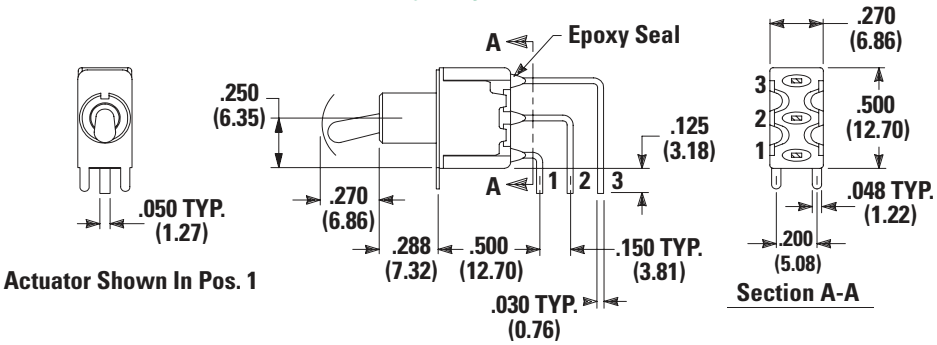

Note: Not available with I seal option. Terminal bend radii and lead-in manufacturing option.

PC Mounting

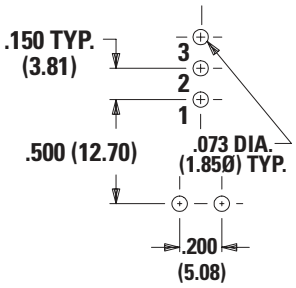

© 2025 Littelfuse, Inc.
Specifications are subject to change without notice.
Revised: VL 06/18/25

AV2 Vertical Right Angle, PC Thru-hole, 0.150" Pitch
7201MD9AV2BE

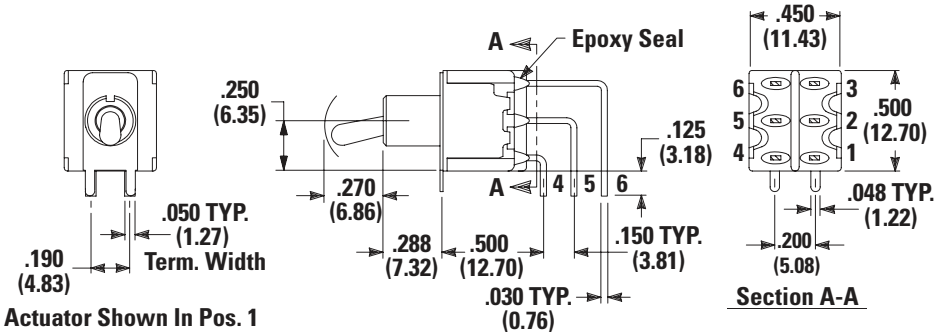

Note: Not available with I seal option. Terminal bend radii and lead-in manufacturing option.

PC Mounting

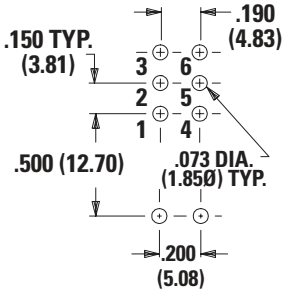

AV2 Vertical Right Angle, PC Thru-hole, 0.150" Pitch
7301MD9AV2BE

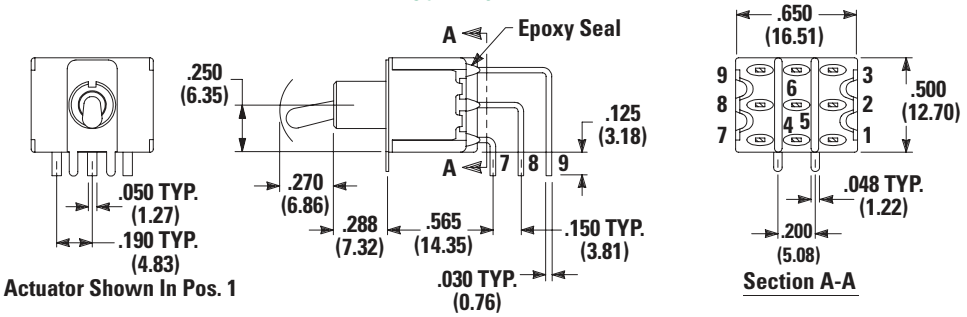

Note: Not available with I seal option. Terminal bend radii and lead-in manufacturing option.

PC Mounting

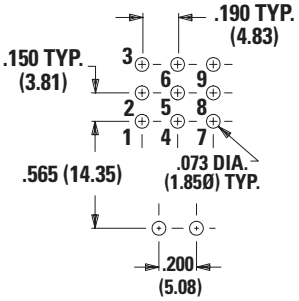

© 2025 Littelfuse, Inc.
Specifications are subject to change without notice.
Revised: VL 06/18/25

7000 Series
Miniature Toggle Switches

Terminations
AV2 Vertical Right Angle, PC Thru-hole, 0.150" Pitch
7401MD9AV2BE

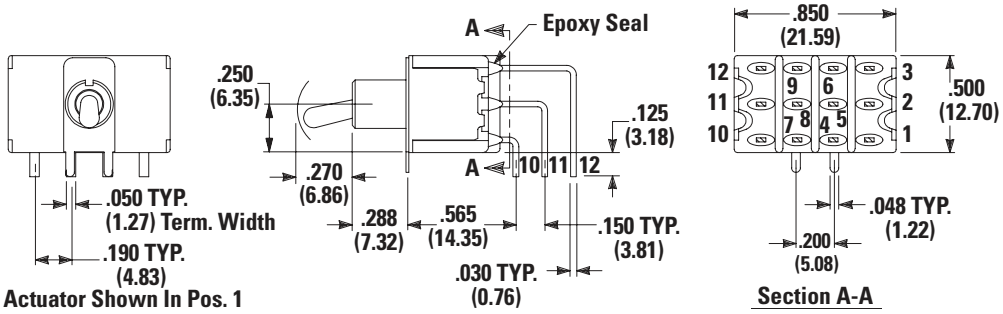

Note: Not available with I seal option. Terminal bend radii and lead-in manufacturing option.

PC Mounting

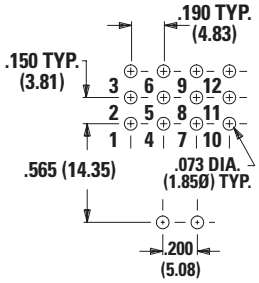

© 2025 Littelfuse, Inc.
Specifications are subject to change without notice.
Revised: VL 06/18/25

7000 Series
Miniature Toggle Switches

Terminations

V7 Vertical Mount, V-bracket
V81 Vertical Mount, V-bracket, Snap-in
Part No. Shown 7101MD9_E

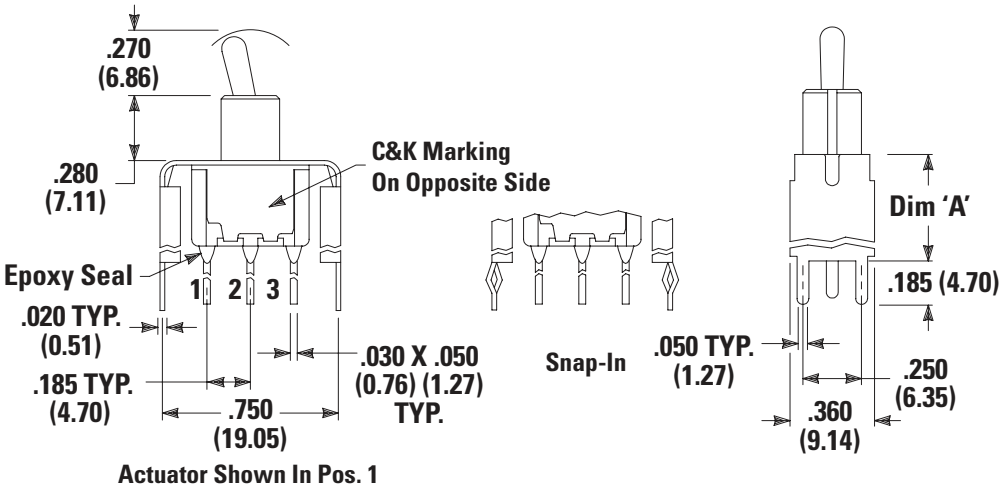

PC Mounting

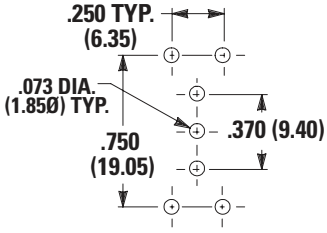

Note: Not available with I seal option.

Option Code	DIM 'A'
V7	0.630 (16.00)
V81	0.953 (24.21)

V7 Vertical Mount, V-bracket
V81 Vertical Mount, V-bracket, Snap-in
Part No. Shown 7201MD9_E

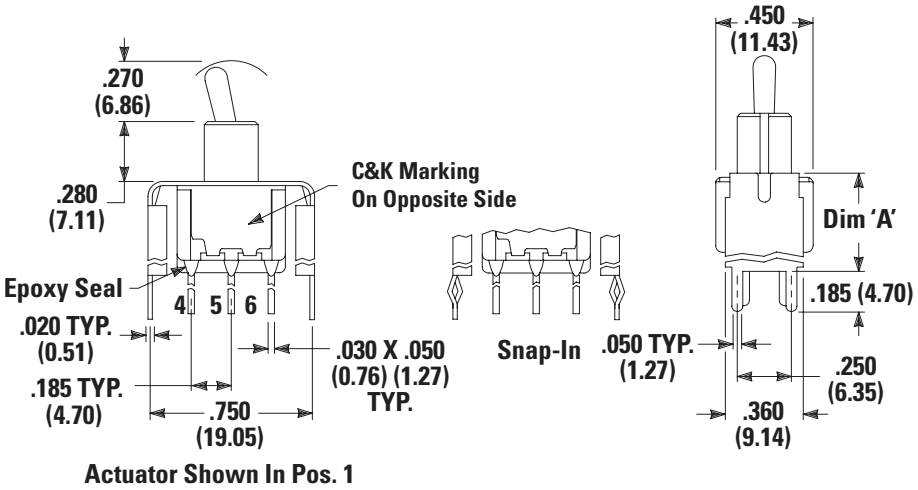

PC Mounting

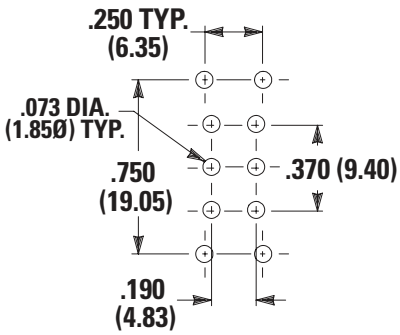

Note: Not available with I seal option.

Option Code	DIM 'A'
V7	0.630 (16.00)
V81	0.953 (24.21)

© 2025 Littelfuse, Inc.
Specifications are subject to change without notice.
Revised: VL 06/18/25

7000 Series
Miniature Toggle Switches

Terminations

V7 Vertical Mount, V-bracket
V81 Vertical Mount, V-bracket, Snap-in
Part No. Shown 7301MD9_E

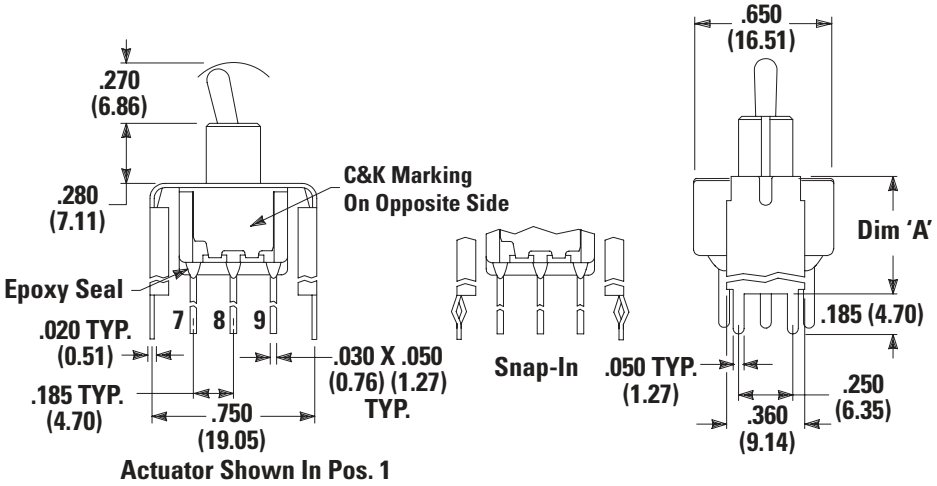

PC Mounting

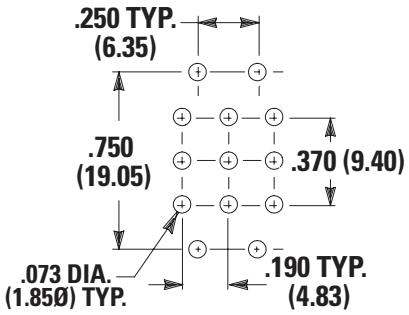

Note: Not available with I seal option.

Option Code	DIM 'A'
V7	0.630 (16.00)
V81	0.953 (24.21)

V7 Vertical Mount, V-Bracket
V81 Vertical Mount, V-bracket, Snap-in
Part No. Shown 7401MD9_E

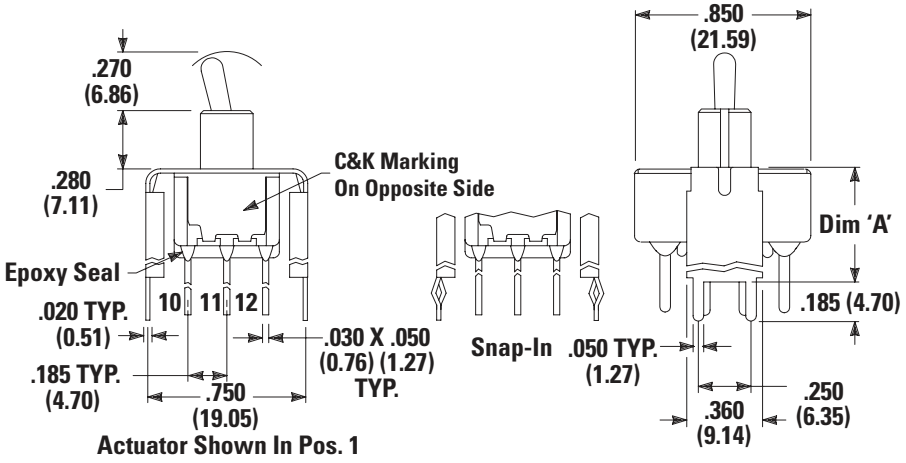

PC Mounting

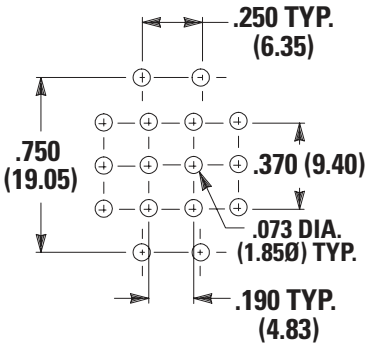

Note: Not available with I seal option.

Option Code	DIM 'A'
V7	0.630 (16.00)
V81	0.953 (24.21)

© 2025 Littelfuse, Inc.
Specifications are subject to change without notice.
Revised: VL 06/18/25

7000 Series
Miniature Toggle Switches

Terminations

V3 Vertical Mount, V-bracket
7101MD9V3BE

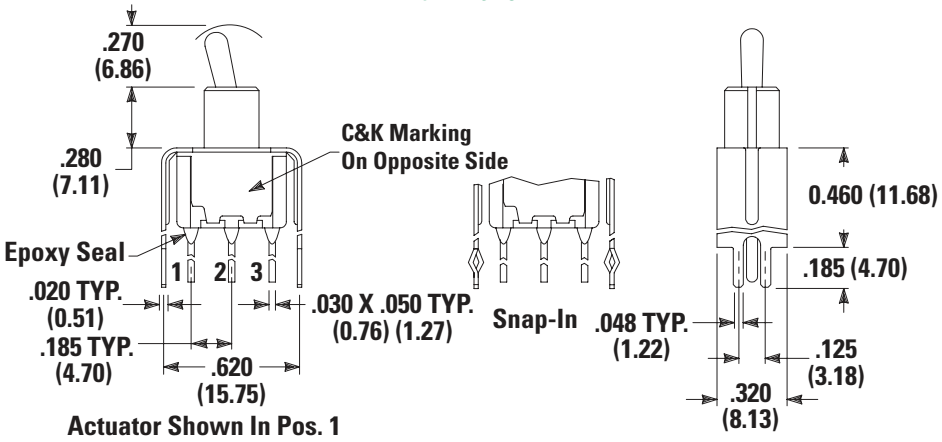

PC Mounting

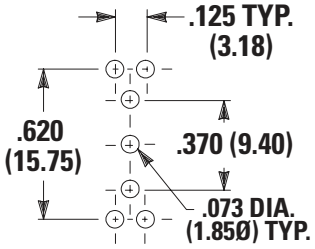

Note: Not available with I seal option.

V3 Vertical Mount, V-bracket
7201MD9V3BE

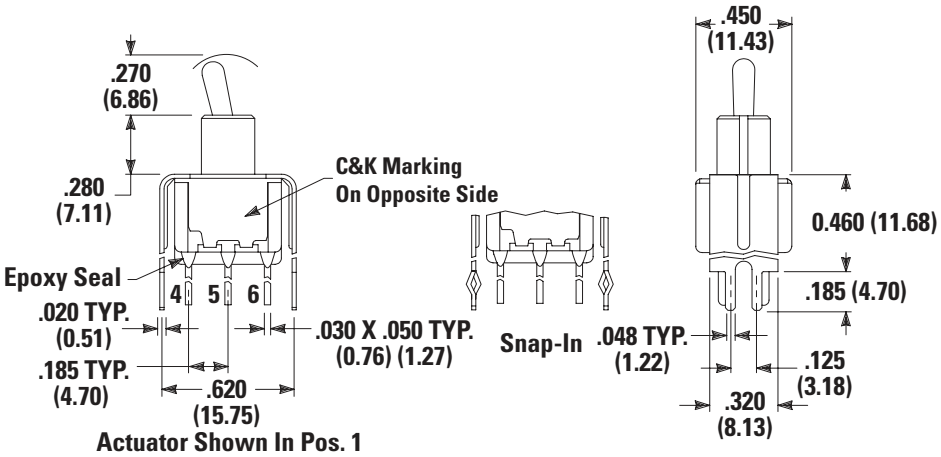

PC Mounting

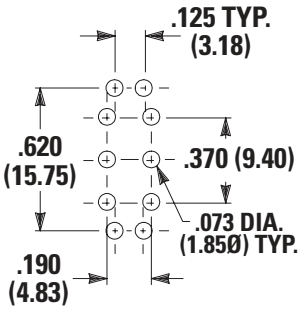

Note: Not available with I seal option.

© 2025 Littelfuse, Inc.
Specifications are subject to change without notice.
Revised: VL 06/18/25

7000 Series
Miniature Toggle Switches

Contact Material

Option Code	Contact Material	Terminal Plating	Ratings	
B	Gold[1]	Gold[1]	Low Level / Dry Circuit	0.4 VA max. @ 20 V AC or DC max.
Q	Silver[4,5]	Silver[5]	Power	5 amps @ 120 V AC or 28 V DC; 2 amps @ 250 V AC
S		Matte-Tin[6]		
G	Gold over Silver [2,3]	Gold[3]	Low Level / Dry Level Circuit or Power	0.4 VA max. @ 20 V AC or DC max. Or 5 amps @ 120 V AC or 28 V DC; 2 amps @ 250 V AC
R		Matte-Tin[6]		

Notes: See Technical Data section of this catalog for RoHS compliant and compatible definitions and specifications.
1. Contacts & Terminals: Copper alloy, with gold plate over nickel plate.
2. End Contacts: Coin silver, with gold plate over nickel plate
3. Center Contacts & All Terminals: Copper alloy, with gold plate over nickel plate.
4. End Contacts: Coin silver, silver plated.
5. Center Contacts & All Terminals: Copper alloy, silver plated.
6. Terminals: Copper alloy, with matte tin alloy nickel plate.
Any models supplied with S, R, Q, B or G contact material are RoHS compliant. U11-U415 model numbers c UL us with all options when ordered with G, S, R, or Q contact material. B contact material standard with all terminations except C & Z. Q contact material standard with C, Z terminations. S & R contact materials not available with Z terminations.

Seal

E Epoxy Seal

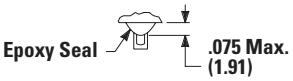

Note: Compatible with "bottom-wash" PC board cleaning methods.

I Epoxy Potted Base

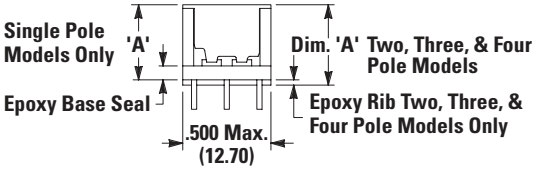

Length is Same as Case Length

Note: Available with C, Z or W3 terminations.

No Poles	DIM 'A'
SP	0.410 (10.41)
DP	0.440 (11.19)
3P	0.505 (12.83)
4P	0.505 (12.83)

Available Hardware

Cap

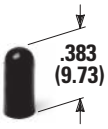

PART NO.
896801000 WHITE
896802000 BLACK
896803000 RED
Material: Polyethylene
Finish: Matte

Cap

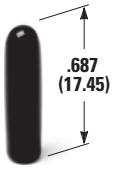

PART NO.
763701000 WHITE
763702000 BLACK
763703000 RED
Material: Vinyl
Finish: Matte

Cap

PART NO.
706201000 WHITE
706202000 BLACK
706203000 RED
Material: Vinyl
Finish: Matte

L41 Lever Handle

PART NO.
481001000 WHITE
481002263 BLACK
481003000 RED
Material: Nylon
Finish: Matte

© 2025 Littelfuse, Inc.
Specifications are subject to change without notice.
Revised: VL 06/18/25

7000 Series
Miniature Toggle Switches

L42 Lever Handle

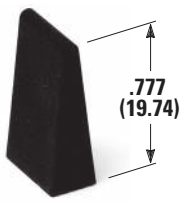

PART NO.
481101000 WHITE
481102263 BLACK
481103000 RED
Material: Nylon
Finish: Matte

759D02000 Sealing Boot

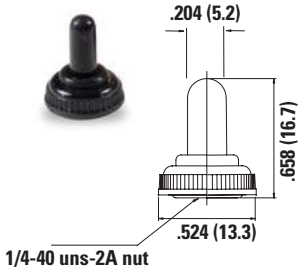

Notes: For use with S actuator style when combined with D, H, Y, and Y4 bushings

703D02000 Sealing Boot

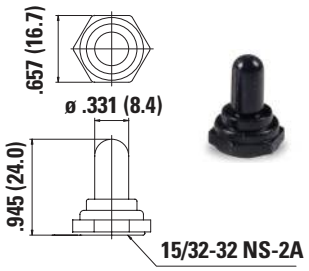

Notes: For use with T and TP style actuators. Cannot be used for Switch Functions: 7103, 7203, 7303, 7107, 7207.

704D02000 Sealing Boot

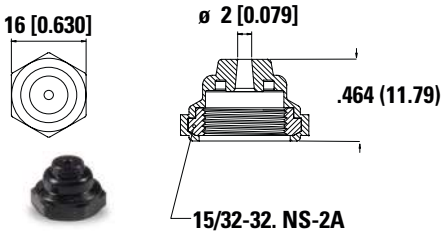

Notes: For use with T and TP style actuators. Cannot be used for Switch Functions: 7103, 7203, 7303, 7107, 7207.

Disclaimer Notice - Information furnished is believed to be accurate and reliable. However, users should independently evaluate the suitability of and test each product selected for their own applications. Littelfuse products are not designed for, and may not be used in, all applications. Read complete Disclaimer Notice at http://www.littelfuse.com/disclaimer-electronics.

© 2025 Littelfuse, Inc.
Specifications are subject to change without notice.
Revised: VL 06/18/25