Low-Voltage 16-Bit Buffer/Line Driver with 5 V Tolerant Inputs and Outputs

74LCX16244

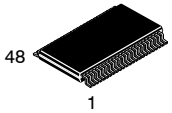

TSSOP48 12.5x6.1
CASE 948BQ

General Description

The LCX16244 contains sixteen non-inverting buffers with 3-STATE outputs designed to be employed as a memory and address driver, clock driver, or bus oriented transmitter/receiver. The device is nibble controlled. Each nibble has separate 3-STATE control inputs which can be shorted together for full 16-bit operation.

The LCX16244 is designed for low voltage (2.5 or 3.3 V) V_{CC} applications with capability of interfacing to a 5 V signal environment.

The LCX16244 is fabricated with an advanced CMOS technology to achieve high speed operation while maintaining CMOS low power dissipation.

Features

- 5 V Tolerant Inputs and Outputs
- 1.65 V to 5.5 V V_{CC} Specifications Provided
- 4.5 ns t_{PD} max (V_{CC} = 3.3 V)
- 10 μA I_{CCQ} max
- Power Down High Impedance Inputs and Outputs
- Supports Live Insertion and Withdrawal*
- ±24 mA Output Drive (V_{CC} = 3.0 V)
- Uses Patented Noise/EMI Reduction Circuitry
- Latch-up Performance Exceeds 100 mA
- ESD Performance:
  - Human Body Model >2000 V
- This Device is Halide Free and Pb-Free

* To ensure the high-impedance state during power up or power down, $\overline{OE}$ should be tied to V_{CC} through a pull-up resistor; the minimum value of the resistor is determined by the current-sourcing capability of the driver.

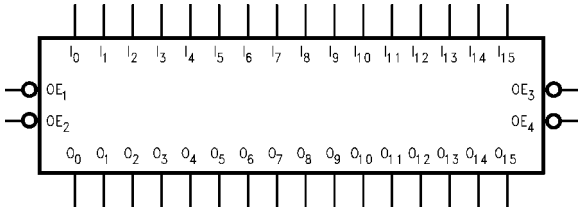

Figure 1. Logic Symbol

MARKING DIAGRAM

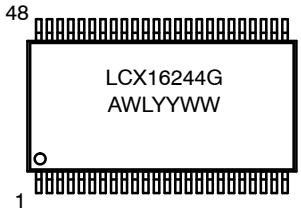

LCX16244	= Specific Device Code
A	= Assembly Location
WL	= Wafer Lot
YY	= Year
WW	= Work Week

PIN DESCRIPTION

Pin Names	Description
$\overline{OE}_n$	Output Enable Input (Active LOW)
I_0–I_{15}	Inputs
O_0–O_{15}	Outputs
NC	No Connect

ORDERING INFORMATION

See detailed ordering and shipping information in the package dimensions section on page 7 of this data sheet.

© Semiconductor Components Industries, LLC, 2005

Connection Diagram

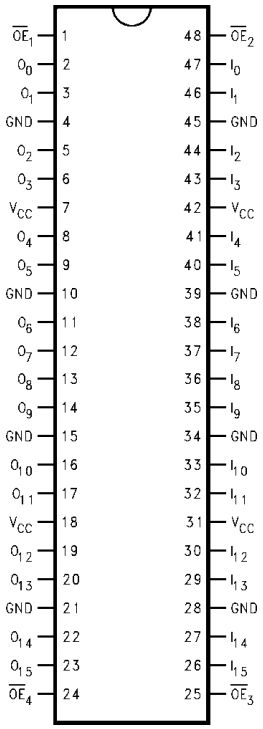

Figure 2. Pin Assignment

TRUTH TABLE

Inputs		Outputs
$\overline{OE}_1$	I_0-I_3	O_0-O_3
L	L	L
L	H	H
H	X	Z

$\overline{OE}_2$	I_4-I_7	O_4-O_7
L	L	L
L	H	H
H	X	Z

$\overline{OE}_3$	I_8-I_{11}	O_8-O_{11}
L	L	L
L	H	H
H	X	Z

$\overline{OE}_4$	I_{12}-I_{15}	O_{12}-O_{15}
L	L	L
L	H	H
H	X	Z

H = HIGH Voltage Level
L = LOW Voltage Level
X = Immaterial (HIGH or LOW, inputs may not float)
Z = High Impedance

Functional Description

The LCX16244 contains sixteen non-inverting buffers with 3-STATE standard outputs. The device is nibble (4 bits) controlled with each nibble functioning identically, but independent of the other. The control pins can be shorted together to obtain full 16-bit operation. The 3-STATE outputs are controlled by an Output Enable ($\overline{OE}_n$) input for each nibble. When $\overline{OE}_n$ is LOW, the outputs are in 2-state mode. When $\overline{OE}_n$ is HIGH, the outputs are in the high impedance mode, but this does not interfere with entering new data into the inputs.

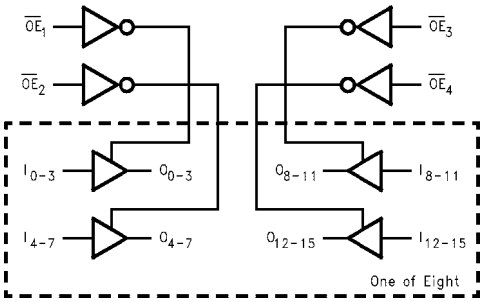

Figure 3. Logic Diagram

Share Feedback
Your Opinion Matters

ABSOLUTE MAXIMUM RATINGS

Symbol	Parameter		Value	Unit
V_{CC}	DC Supply Voltage		–0.5 to +6.5	V
V_{IN}	DC Input Voltage (Note 1)		–0.5 to +6.5	V
V_{OUT}	DC Output Voltage (Note 1) Tri-State Mode Power-Down Mode (V_{CC} = 0 V)	Active-Mode (High or Low State)	–0.5 to V_{CC} + 0.5 –0.5 to +6.5 –0.5 to +6.5	V
I_{IK}	DC Input Diode Current	V_{IN} < GND	–50	mA
I_{OK}	DC Output Diode Current	V_{OUT} < GND	–50	mA
I_O	DC Output Source/Sink Current		±50	mA
I_{CC}	DC Supply Current per Supply Pin		±100	mA
I_{GND}	DC Supply Current per Ground Pin		±100	mA
T_{STG}	Storage Temperature Range		–65 to +150	°C
T_L	Lead Temperature, 1 mm from Case for 10 secs		260	°C
T_J	Junction Temperature Under Bias		+150	°C
θ_{JA}	Thermal Resistance (Note 2)		71	°C/W
P_D	Power Dissipation in Still Air		1765	mW
MSL	Moisture Sensitivity		Level 1	–
F_R	Flammability Rating	Oxygen Index: 28 to 34	UL 94 V-0 @ 0.125 in	–
V_{ESD}	ESD Withstand Voltage (Note 3) Charged Device Model	Human Body Model	>2000 N/A	V

Stresses exceeding those listed in the Maximum Ratings table may damage the device. If any of these limits are exceeded, device functionality should not be assumed, damage may occur and reliability may be affected.

1. I_O absolute maximum rating must be observed.
2. Measured with minimum pad spacing on an FR4 board, using 76 mm-by-114 mm, 2-ounce copper trace no air flow per JESD51-7.
3. HBM tested to EIA / JESD22-A114-A. CDM tested to JESD22-C101-A. JEDEC recommends that ESD qualification to EIA/JESD22-A115A (Machine Model) be discontinued.

RECOMMENDED OPERATING CONDITIONS

Symbol	Parameter		Min	Typ	Max	Unit
V_{CC}	Supply Voltage Data Retention Only	Operating	1.65 1.5	3.3 3.3	5.5 5.5	V
V_{IN}	Digital Input Voltage (Note 4)		0	–	5.5	V
V_{OUT}	Output Voltage (Note 4) Tri-State Mode Power Down Mode (V_{CC} = 0 V)	Active Mode (High or Low State)	0 0 0	– – –	V_{CC} 5.5 5.5	V
T_A	Operating Free-Air Temperature		–55	–	+125	°C
t_r, t_f	Input Rise or Fall Rate V_{CC} = 2.3 V to 2.7 V V_{IN} from 0.8 V to 2.0 V, V_{CC} = 3.0 V V_{CC} = 4.5 V to 5.5 V	V_{CC} = 1.65 V to 1.95 V	0 0 0 0	– – – –	20 20 10 5	ns/V

Functional operation above the stresses listed in the Recommended Operating Ranges is not implied. Extended exposure to stresses beyond the Recommended Operating Ranges limits may affect device reliability.

4. Unused inputs must always be tied to an appropriate logic voltage level (e.g., either GND or V_{CC}). Unused outputs must be left open.

Share Feedback
Your Opinion Matters

DC ELECTRICAL CHARACTERISTICS

Symbol	Parameter	Conditions	V_{CC} (V)	T_A = −40 °C to +85 °C		T_A = −55 °C to +125 °C		Unit
				Min	Max	Min	Max	
V_{IH}	High-Level Input Voltage		1.65 to 1.95	0.65 x V_{CC}	–	0.65 x V_{CC}	–	V
			2.3 to 2.7	1.7	–	1.7	–	
			2.7 to 3.6	2.0	–	2.0	–	
			4.5 to 5.5	0.7 x V_{CC}	–	0.7 x V_{CC}	–	
V_{IL}	Low-Level Input Voltage		1.65 to 1.95	–	0.35 x V_{CC}	–	0.35 x V_{CC}	V
			2.3 to 2.7	–	0.7	–	0.7	
			2.7 to 3.6	–	0.8	–	0.8	
			4.5 to 5.5	–	0.3 x V_{CC}	–	0.3 x V_{CC}	
V_{OH}	High-Level Output Voltage	$V_I = V_{IH}$						V
		I_{OH} = −100 μA	1.65 to 5.5	V_{CC} − 0.1	–	V_{CC} − 0.1	–	
		I_{OH} = −4 mA	1.65	1.2	–	1.2	–	
		I_{OH} = −8 mA	2.3	1.8	–	1.8	–	
		I_{OH} = −12 mA	2.7	2.2	–	2.2	–	
		I_{OH} = −16 mA	3.0	2.4	–	2.4	–	
		I_{OH} = −24 mA	3.0	2.2	–	2.2	–	
		I_{OH} = −32 mA	4.5	3.8	–	3.8	–	
V_{OL}	Low-Level Output Voltage	$V_I = V_{IL}$						V
		I_{OL} = 100 μA	1.65 to 5.5	–	0.1	–	0.1	
		I_{OL} = 4 mA	1.65	–	0.45	–	0.45	
		I_{OL} = 8 mA	2.3	–	0.6	–	0.6	
		I_{OL} = 12 mA	2.7	–	0.4	–	0.4	
		I_{OL} = 16 mA	3.0	–	0.4	–	0.4	
		I_{OL} = 24 mA	3.0	–	0.55	–	0.55	
		I_{OL} = 32 mA	4.5	–	0.6	–	0.6	
I_I	Input Leakage Current	V_I = 0 to 5.5 V	3.6	–	±5.0	–	±5.0	μA
I_{OZ}	3-State Output Leakage Current	$V_I = V_{IH}$ or V_{IL}, V_O = 0 V to 5.5 V	3.6	–	±5.0	–	±5.0	μA
I_{OFF}	Power Off Leakage Current	V_I = 5.5 V or V_O = 5.5 V	0	–	10	–	10	μA
I_{CC}	Quiescent Supply Current	V_I = 5.5 V or GND	3.6	–	10	–	10	μA
ΔI_{CC}	Increase in I_{CC} per Input	$V_{IH} = V_{CC}$ − 0.6 V	2.3 to 3.6	–	500	–	500	μA

Product parametric performance is indicated in the Electrical Characteristics for the listed test conditions, unless otherwise noted. Product performance may not be indicated by the Electrical Characteristics if operated under different conditions.

Share Feedback
Your Opinion Matters

AC ELECTRICAL CHARACTERISTICS

Symbol	Parameter	Test Condition	V_{CC} (V)	T_A = −40 °C to +85 °C		T_A = −55 °C to +125 °C		Unit
				Min	Max	Min	Max	
t_{PLH}, t_{PHL}	Propagation Delay, I to O	See Figures 4 and 5	1.65 to 1.95	–	8.5	–	8.5	ns
			2.3 to 2.7	–	5.4	–	5.4	
			2.7	–	5.2	–	5.2	
			3.0 to 3.6	–	4.5	–	4.5	
			4.5 to 5.5	–	4.0	–	4.0	
t_{PZH}, t_{PZL}	Output Enable Time, $\overline{OE}$ to O	See Figures 4 and 5	1.65 to 1.95	–	10.5	–	10.5	ns
			2.3 to 2.7	–	7.2	–	7.2	
			2.7	–	6.3	–	6.3	
			3.0 to 3.6	–	5.5	–	5.5	
			4.5 to 5.5	–	5.5	–	5.5	
t_{PHZ}, t_{PLZ}	Output Disable Time, $\overline{OE}$ to O	See Figures 4 and 5	1.65 to 1.95	–	9.7	–	9.7	ns
			2.3 to 2.7	–	6.5	–	6.5	
			2.7	–	5.7	–	5.7	
			3.0 to 3.6	–	5.4	–	5.4	
			4.5 to 5.5	–	5.4	–	5.4	
t_{OSHL}, t_{OSLH}	Output to Output Skew, (Note 5)		1.65 to 1.95	–	–	–	–	ns
			2.3 to 2.7	–	–	–	–	
			2.7	–	–	–	–	
			3.0 to 3.6	–	1.0	–	1.0	
			4.5 to 5.5	–	–	–	–	

5. Skew is defined as the absolute value of the difference between the actual propagation delay for any two separate outputs of the same device. The specification applies to outputs switching in the same direction, either HIGH-to-LOW (t_{OSHL}) ot LOW-to-HIGH (t_{OSLH}).

DYNAMIC SWITCHING CHARACTERISTICS (Note 6)

Symbol	Characteristic	Condition	V_{CC} (V)	T_A = +25 °C, Typical	Units
V_{OLP}	Quiet Output Dynamic Peak V_{OL}	C_L = 50 pF, V_{IH} = 3.3 V, V_{IL} = 0 V C_L = 30 pF, V_{IH} = 2.5 V, V_{IL} = 0 V	3.3 2.5	0.8 0.6	V
V_{OLV}	Quiet Output Dynamic Valley V_{OL}	C_L = 50 pF, V_{IH} = 3.3 V, V_{IL} = 0 V C_L = 30 pF, V_{IH} = 2.5 V, V_{IL} = 0 V	3.3 2.5	−0.8 −0.6	V

6. Number of outputs defined as “n”. Measured with “n−1” outputs switching from HIGH-to-LOW or LOW-to-HIGH. The remaining output is measured in the LOW state.

CAPACITANCE

Symbol	Parameter	Condition	Typical	Units
C_{IN}	Input Capacitance	VCC = Open, VI = 0 V or VCC	7	pF
C_{OUT}	Output Capacitance	VCC = 3.3 V, VI = 0 V or VCC	8	pF
C_{PD}	Power Dissipation Capacitance (Note 7)	VCC = 3.3 V, VI = 0 V or VCC, f = 10 MHz	20	pF

7. C_{PD} is defined as the value of the internal equivalent capacitance which is calculated from the dynamic operating current consumption without load. Average operating current can be obtained by the equation $I_{CC(OPR)} = C_{PD} \bullet V_{CC} \bullet f_{in} + I_{CC}$. C_{PD} is used to determine the no-load dynamic power consumption: $P_D = C_{PD} \bullet V_{CC}^2 \bullet f_{in} + I_{CC} \bullet V_{CC}$.

Share Feedback
Your Opinion Matters

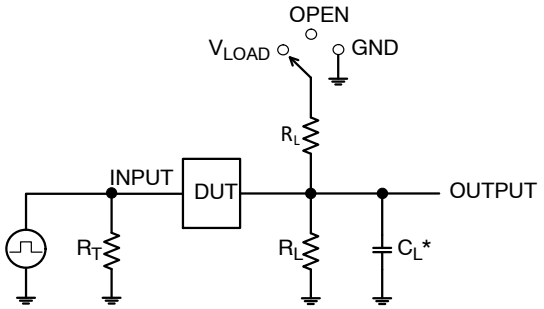

Test	Switch Position
t_{PLH} / t_{PHL}	Open
t_{PLZ} / t_{PZL}	V_{LOAD}
t_{PHZ} / t_{PZH}	GND

C_L includes probe and jig capacitance
R_T is Z_{OUT} of pulse generator (typically 50 Ω)
f = 1 MHz

Figure 4. Test Circuit

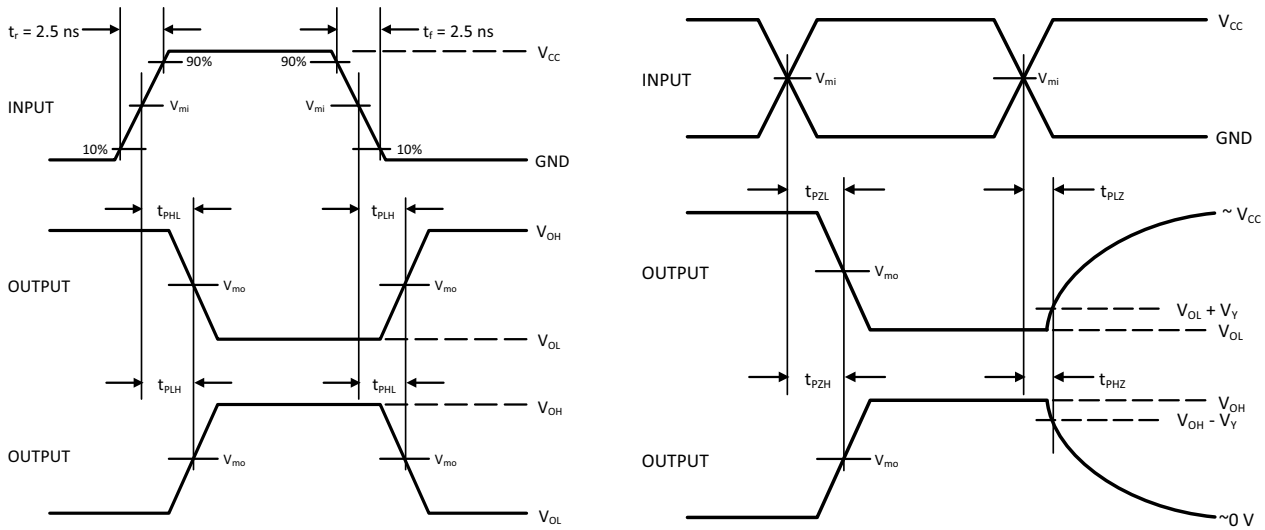

V_{CC}, V	R_L, Ω	C_L, pF	V_{LOAD}	V_{mi}, V	V_{mo}, V	V_Y, V
1.65 to 1.95	500	30	2 x V_{CC}	$V_{CC}/2$	$V_{CC}/2$	0.15
2.3 to 2.7	500	30	2 x V_{CC}	$V_{CC}/2$	$V_{CC}/2$	0.15
2.7	500	50	6 V	1.5	1.5	0.3
3.0 to 3.6	500	50	6 V	1.5	1.5	0.3
4.5 to 5.5	500	50	2 x V_{CC}	$V_{CC}/2$	$V_{CC}/2$	0.3

Figure 5. Switching Waveforms

Share Feedback
Your Opinion Matters

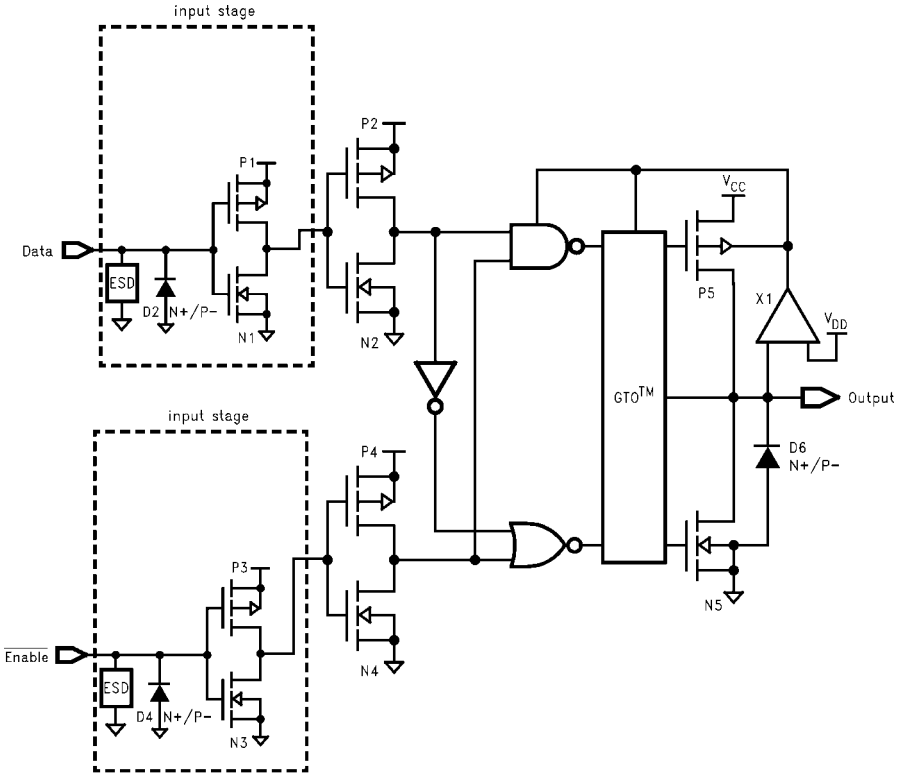

Figure 6. Schematic Diagram

ORDERING INFORMATION

Device	Marking	Package	Shipping†
74LCX16244MTDX	LCX16244G	TSSOP-48	1,000 Units / Tape & Reel

† For information on tape and reel specifications, including part orientation and tape sizes, please refer to our Tape and Reel Packaging Specifications Brochure, BRD8011/D.

Share Feedback
Your Opinion Matters

REVISION HISTORY

Revision	Description of Changes	Date
1	Converted the Data Sheet to **onsemi** format with the updates in Ordering Information Table, Recommended Operating Table, Maximum Rating Table and Figure 4 and 5 from the data sheet MC74LCX16244/D.	9/29/2025
2	Added electrical characteristics for TBD specifications and made editorial corrections throughout the document.	3/6/2026

This document has undergone updates prior to the inclusion of this revision history table. The changes tracked here only reflect updates made on the noted approval dates.

Share Feedback
Your Opinion Matters

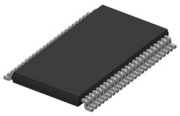

TSSOP−48 12.50x6.10x0.90, 0.50P
CASE 948BQ
ISSUE A

DATE 27 JUL 2026

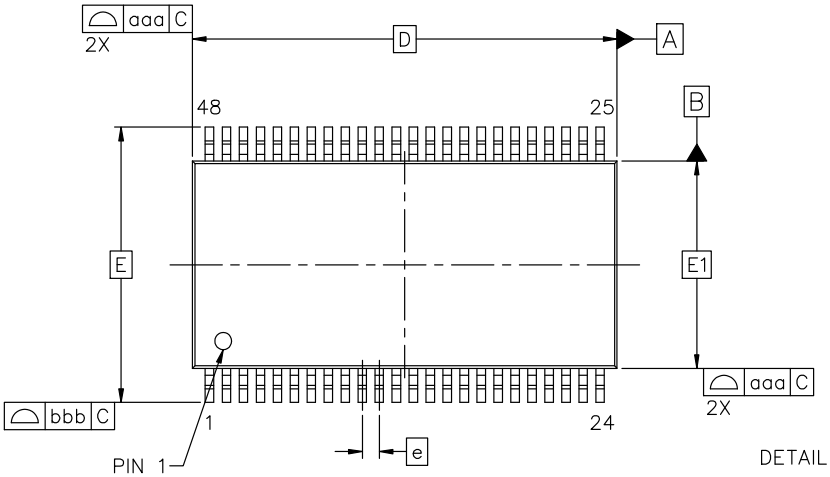

MILLIMETERS			
DIM	MIN	NOM	MAX
A	---	---	1.20
A1	0.05	0.10	0.15
A2	0.80	0.90	1.00
b	0.17	0.20	0.27
c	0.09	0.15	0.20
D	12.50 BSC		
E	8.10 BSC		
E1	6.10 BSC		
e	0.50 BSC		
L	0.50	0.60	0.70
L1	1.00 REF		
L2	0.25 BSC		
Θ	0°	4°	8°
TOLERANCE FORM & POSITION			
aaa	0.10		
bbb	0.20		
ccc	0.10		
ddd	0.13		
eee	0.10		

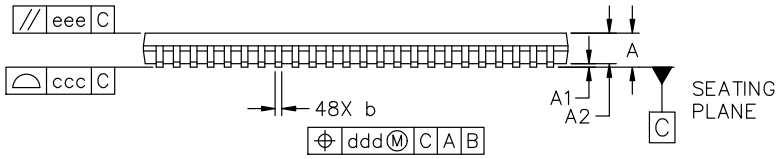

SIDE VIEW

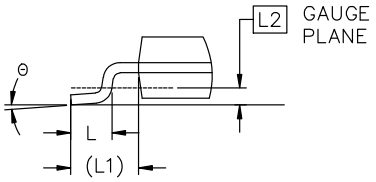

DETAIL 'A'
SCALE 2:1

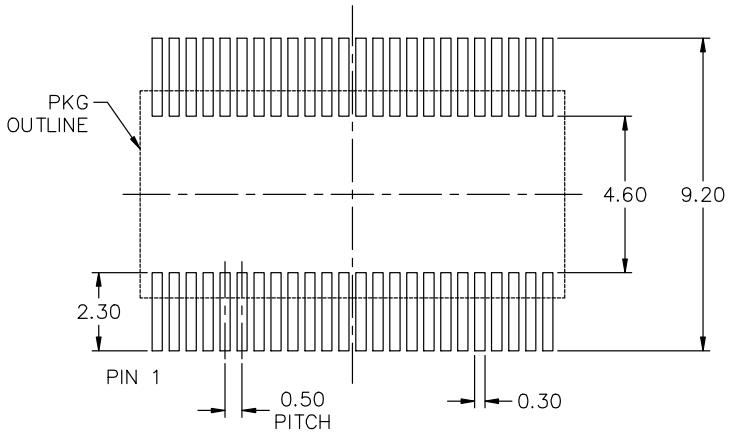

RECOMMENDED MOUNTING FOOTPRINT
*For additional information on our Pb−Free strategy and soldering details, please download the onsemi Soldering and Mounting Techniques Reference Manual, SOLDERRM/D.

NOTES:
1. DIMENSIONING AND TOLERANCING AS PER ASME Y14.5M, 2018.
2. CONTROLLING DIMENSION: MILLIMETERS.
3. DIMENSIONS ARE EXCLUSIVE OF BURRS, MOLD FLASH, AND TIE BAR EXTRUSIONS.

DOCUMENT NUMBER:	98AON13775G	Electronic versions are uncontrolled except when accessed directly from the Document Repository. Printed versions are uncontrolled except when stamped "CONTROLLED COPY" in red.	
DESCRIPTION:	TSSOP−48 12.50x6.10x0.90, 0.50P		PAGE 1 OF 1

onsemi and onsemi are trademarks of Semiconductor Components Industries, LLC dba **onsemi** or its subsidiaries in the United States and/or other countries. **onsemi** reserves the right to make changes without further notice to any products herein. **onsemi** makes no warranty, representation or guarantee regarding the suitability of its products for any particular purpose, nor does **onsemi** assume any liability arising out of the application or use of any product or circuit, and specifically disclaims any and all liability, including without limitation special, consequential or incidental damages. **onsemi** does not convey any license under its patent rights nor the rights of others.

onsemi, onsemi, and other names, marks, and brands are registered and/or common law trademarks of Semiconductor Components Industries, LLC dba "**onsemi**" or its affiliates and/or subsidiaries in the United States and/or other countries. **onsemi** owns the rights to a number of patents, trademarks, copyrights, trade secrets, and other intellectual property. A listing of **onsemi**'s product/patent coverage may be accessed at www.onsemi.com/site/pdf/Patent−Marking.pdf. **onsemi** reserves the right to make changes at any time to any products or information herein, without notice. The information herein is provided "as−is" and **onsemi** makes no warranty, representation or guarantee regarding the accuracy of the information, product features, availability, functionality, or suitability of its products for any particular purpose, nor does **onsemi** assume any liability arising out of the application or use of any product or circuit, and specifically disclaims any and all liability, including without limitation special, consequential or incidental damages. Buyer is responsible for its products and applications using **onsemi** products, including compliance with all laws, regulations and safety requirements or standards, regardless of any support or applications information provided by **onsemi**. "Typical" parameters which may be provided in **onsemi** data sheets and/or specifications can and do vary in different applications and actual performance may vary over time. All operating parameters, including "Typicals" must be validated for each customer application by customer's technical experts. **onsemi** does not convey any license under any of its intellectual property rights nor the rights of others. **onsemi** products are not designed, intended, or authorized for use as a critical component in life support systems or any FDA Class 3 medical devices or medical devices with a same or similar classification in a foreign jurisdiction or any devices intended for implantation in the human body. Should Buyer purchase or use **onsemi** products for any such unintended or unauthorized application, Buyer shall indemnify and hold **onsemi** and its officers, employees, subsidiaries, affiliates, and distributors harmless against all claims, costs, damages, and expenses, and reasonable attorney fees arising out of, directly or indirectly, any claim of personal injury or death associated with such unintended or unauthorized use, even if such claim alleges that **onsemi** was negligent regarding the design or manufacture of the part. **onsemi** is an Equal Opportunity/Affirmative Action Employer. This literature is subject to all applicable copyright laws and is not for resale in any manner.

ADDITIONAL INFORMATION

TECHNICAL PUBLICATIONS:
Technical Library: www.onsemi.com/design/resources/technical−documentation
onsemi Website: www.onsemi.com

ONLINE SUPPORT: www.onsemi.com/support
For additional information, please contact your local Sales Representative at
www.onsemi.com/support/sales